BA01995D/06/EN/03.23-00
71620275
2023-07-28

Valid as of version
01.00.zz (Device firmware)

Operating Instructions
Proline t-mass I 300

Thermal mass flowmeter
Modbus RS485

NIC SANAT
نیک صنعت
www.nicsanat.com
021-87700210

Endress+Hauser
People for Process Automation

- Make sure the document is stored in a safe place such that it is always available when working on or with the device.
- To avoid danger to individuals or the facility, read the "Basic safety instructions" section carefully, as well as all other safety instructions in the document that are specific to working procedures.
- The manufacturer reserves the right to modify technical data without prior notice. Your Endress+Hauser Sales Center will supply you with current information and updates to these instructions.

www.nicsanat.com
021-87700210
NIC SANAT
نیک صنعت

Table of contents

1 About this document 6
1.1 Document function 6
1.2 Symbols 6
1.2.1 Safety symbols 6
1.2.2 Electrical symbols 6
1.2.3 Communication-specific symbols 6
1.2.4 Tool symbols 7
1.2.5 Symbols for certain types of information 7
1.2.6 Symbols in graphics 7
1.3 Documentation 8
1.3.1 Document function 8
1.4 Registered trademarks 8

2 Safety instructions 9
2.1 Requirements for the personnel 9
2.2 Intended use 9
2.3 Workplace safety 10
2.4 Operational safety 10
2.5 Product safety 10
2.6 IT security 11
2.7 Device-specific IT security 11
2.7.1 Protecting access via hardware write protection 11
2.7.2 Protecting access via a password 11
2.7.3 Access via web server 12
2.7.4 Access via service interface (CDI-RJ45) 13

3 Product description 14
3.1 Product design 14

4 Incoming acceptance and product identification 15
4.1 Incoming acceptance 15
4.2 Product identification 15
4.2.1 Transmitter nameplate 16
4.2.2 Sensor nameplate 17
4.2.3 Symbols on the device 17
4.3 Storage and transport 18
4.3.1 Storage conditions 18
4.3.2 Transporting the product 18
4.3.3 Packaging disposal 18

5 Mounting 19
5.1 Mounting requirements 19
5.1.1 Installation position 19
5.1.2 Environment and process requirements 25
5.1.3 Special mounting instructions 27
5.2 Mounting the measuring device 28
5.2.1 Required tool 28
5.2.2 Preparing the measuring device 28
5.2.3 Mounting the measuring device 28
5.2.4 Turning the transmitter housing 30
5.2.5 Turning the display module 31
5.3 Post-installation check 32

6 Electrical connection 33
6.1 Electrical safety 33
6.2 Connecting requirements 33
6.2.1 Required tools 33
6.2.2 Requirements for connecting cable . . . 33
6.2.3 Terminal assignment 36
6.2.4 Shielding and grounding 36
6.2.5 Preparing the measuring device 36
6.3 Connecting the measuring device 37
6.3.1 Connecting the transmitter 37
6.3.2 Connecting the remote display and operating module DKX001 40
6.4 Potential equalization 40
6.4.1 Requirements 40
6.5 Special connection instructions 41
6.5.1 Connection examples 41
6.6 Hardware settings 43
6.6.1 Setting the device address 43
6.6.2 Activating the terminating resistor . . 44
6.7 Ensuring the degree of protection 44
6.8 Post-connection check 45

7 Operation options 46
7.1 Overview of operation options 46
7.2 Structure and function of the operating menu 47
7.2.1 Structure of the operating menu 47
7.2.2 Operating philosophy 48
7.3 Access to operating menu via local display . . . 49
7.3.1 Operational display 49
7.3.2 Navigation view 51
7.3.3 Editing view 53
7.3.4 Operating elements 55
7.3.5 Opening the context menu 55
7.3.6 Navigating and selecting from list . . . 57
7.3.7 Calling the parameter directly 57
7.3.8 Calling up help text 58
7.3.9 Changing the parameters 58
7.3.10 User roles and related access authorization 59
7.3.11 Disabling write protection via access code 59
7.3.12 Enabling and disabling the keypad lock 60
7.4 Access to operating menu via web browser . . . 60
7.4.1 Function range 60
7.4.2 Requirements 61
7.4.3 Establishing a connection 62

www.nicsanat.com
021-87700210
NIC SANAT
نیک صنعت

7.4.4 Logging on 64
7.4.5 User interface 65
7.4.6 Disabling the Web server 66
7.4.7 Logging out 66
7.5 Access to the operating menu via the operating tool 67
7.5.1 Connecting the operating tool 67
7.5.2 FieldCare 69
7.5.3 DeviceCare 71

8 System integration 72

8.1 Overview of device description files 72
8.1.1 Current version data for the device . . . 72
8.1.2 Operating tools 72
8.2 Compatibility with earlier model 72
8.3 Modbus RS485 information 73
8.3.1 Function codes 73
8.3.2 Register information 74
8.3.3 Response time 74
8.3.4 Data types 74
8.3.5 Byte transmission sequence 75
8.3.6 Modbus data map 75

9 Commissioning 78

9.1 Post-mounting and post-connection check . . . 78
9.2 Switching on the measuring device 78
9.3 Setting the operating language 78
9.4 Configuring the measuring device 79
9.4.1 Defining the tag name 80
9.4.2 Configuring the measurement mode . 80
9.4.3 Configuring reference conditions 84
9.4.4 Sensor adjustment 85
9.4.5 Setting the system units 86
9.4.6 Configuring the communication interface 88
9.4.7 Displaying the I/O configuration 89
9.4.8 Configuring the current input 90
9.4.9 Configuring the status input 91
9.4.10 Configuring the current output 92
9.4.11 Configuring the pulse/frequency/ switch output 95
9.4.12 Configuring the relay output 101
9.4.13 Configuring the local display 102
9.4.14 Configuring the low flow cut off 105
9.5 Advanced settings 106
9.5.1 Using the parameter to enter the access code 106
9.5.2 Configuring the totalizer 106
9.5.3 Carrying out additional display configurations 108
9.5.4 WLAN configuration 111
9.5.5 Configuration management 113
9.5.6 Using parameters for device administration 114
9.5.7 In-situ adjustment 116
9.6 Configuration management 122
9.6.1 Function scope of the "Configuration management" parameter 122
9.7 Simulation 123
9.8 Protecting settings from unauthorized access 125
9.8.1 Write protection via access code . . . 125
9.8.2 Write protection via write protection switch 127

10 Operation 129

10.1 Reading off the device locking status 129
10.2 Adjusting the operating language 129
10.3 Configuring the display 129
10.4 Reading off measured values 129
10.4.1 Process variables 130
10.4.2 System values 131
10.4.3 "Totalizer" submenu 131
10.4.4 "Input values" submenu 132
10.4.5 Output values 133
10.5 Adapting the measuring device to the process conditions 135
10.6 Performing a totalizer reset 135
10.6.1 Function scope of "Control Totalizer" parameter 136
10.6.2 Function range of "Reset all totalizers" parameter 136
10.7 Displaying data logging 136

11 Diagnostics and troubleshooting . . 139

11.1 General troubleshooting 139
11.2 Diagnostic information via light emitting diodes 141
11.2.1 Transmitter 141
11.3 Diagnostic information on local display 142
11.3.1 Diagnostic message 142
11.3.2 Calling up remedial measures 144
11.4 Diagnostic information in the web browser . . 144
11.4.1 Diagnostic options 144
11.4.2 Calling up remedy information 145
11.5 Diagnostic information in FieldCare or DeviceCare 145
11.5.1 Diagnostic options 145
11.5.2 Calling up remedy information 146
11.6 Diagnostic information via communication interface 147
11.6.1 Reading out diagnostic information 147
11.6.2 Configuring error response mode . . . 147
11.7 Adapting the diagnostic information 147
11.7.1 Adapting the diagnostic behavior . . . 147
11.8 Overview of diagnostic information 148
11.9 Pending diagnostic events 151
11.10 Diagnostic list 152
11.11 Event logbook 152
11.11.1 Reading out the event logbook 152
11.11.2 Filtering the event logbook 153
11.11.3 Overview of information events 153
11.12 Resetting the measuring device 155
11.12.1 Function range of "Device reset" parameter 155
11.13 Device information 155
11.14 Firmware history 156

www.nicsanat.com
021-87700210
NIC SANAT
نیک صنعت

12 Maintenance 157
12.1 Maintenance tasks 157
12.1.1 Exterior cleaning 157
12.1.2 Sensing element cleaning 157
12.1.3 Recalibration 158
12.2 Measuring and test equipment 158
12.3 Endress+Hauser services 158

13 Repair 159
13.1 General information 159
13.1.1 Repair and conversion concept 159
13.1.2 Notes for repair and conversion 159
13.2 Spare parts 159
13.3 Endress+Hauser services 159
13.4 Return 159
13.5 Disposal 160
13.5.1 Removing the measuring device 160
13.5.2 Disposing of the measuring device . . 160

14 Accessories 161
14.1 Device-specific accessories 161
14.1.1 For the transmitter 161
14.1.2 For the sensor 162
14.2 Communication-specific accessories 163
14.3 Service-specific accessories 163
14.4 System components 164

15 Technical data 165
15.1 Application 165
15.2 Function and system design 165
15.3 Input 166
15.4 Output 171
15.5 Power supply 176
15.6 Performance characteristics 178
15.7 Mounting 179
15.8 Environment 180
15.9 Process 182
15.10 Mechanical construction 184
15.11 Display and user interface 187
15.12 Certificates and approvals 192
15.13 Application packages 195
15.14 Accessories 196
15.15 Documentation 196

Index 198

www.nicsanat.com
021-87700210
NIC SANAT
نیک صنعت

1 About this document

1.1 Document function

These Operating Instructions contain all the information required in the various life cycle phases of the device: from product identification, incoming acceptance and storage, to installation, connection, operation and commissioning, through to troubleshooting, maintenance and disposal.

1.2 Symbols

1.2.1 Safety symbols

⚠ DANGER
This symbol alerts you to a dangerous situation. Failure to avoid this situation will result in serious or fatal injury.

⚠ WARNING
This symbol alerts you to a dangerous situation. Failure to avoid this situation can result in serious or fatal injury.

⚠ CAUTION
This symbol alerts you to a dangerous situation. Failure to avoid this situation can result in minor or medium injury.

NOTICE
This symbol contains information on procedures and other facts which do not result in personal injury.

1.2.2 Electrical symbols

Symbol	Meaning
⎓	Direct current
∼	Alternating current
≂	Direct current and alternating current
⏚	**Ground connection** A grounded terminal which, as far as the operator is concerned, is grounded via a grounding system.
⏦	**Potential equalization connection (PE: protective earth)** Ground terminals that must be connected to ground prior to establishing any other connections. The ground terminals are located on the interior and exterior of the device: ▪ Interior ground terminal: potential equalization is connected to the supply network. ▪ Exterior ground terminal: device is connected to the plant grounding system.

1.2.3 Communication-specific symbols

Symbol	Meaning
📶	**Wireless Local Area Network (WLAN)** Communication via a wireless, local network.
◉	**LED** Light emitting diode is off.

www.nicsanat.com 021-87700210 NIC SANAT نیک صنعت

Symbol	Meaning
	LED Light emitting diode is on.
	LED Light emitting diode is flashing.

1.2.4 Tool symbols

Symbol	Meaning
	Flat-blade screwdriver
	Allen key
	Open-ended wrench

1.2.5 Symbols for certain types of information

Symbol	Meaning
	Permitted Procedures, processes or actions that are permitted.
	Preferred Procedures, processes or actions that are preferred.
	Forbidden Procedures, processes or actions that are forbidden.
	Tip Indicates additional information.
	Reference to documentation
	Reference to page
	Reference to graphic
▶	Notice or individual step to be observed
1., 2., 3....	Series of steps
	Result of a step
	Help in the event of a problem
	Visual inspection

1.2.6 Symbols in graphics

Symbol	Meaning
1, 2, 3, ...	Item numbers
1., 2., 3., ...	Series of steps
A, B, C, ...	Views
A-A, B-B, C-C, ...	Sections
EX	Hazardous area

www.nicsanat.com
021-87700210
NIC SANAT
نیک صنعت

Symbol	Meaning
⊗	Safe area (non-hazardous area)
≋➡	Flow direction

1.3 Documentation

For an overview of the scope of the associated Technical Documentation, refer to the following:
- *Device Viewer* (www.endress.com/deviceviewer): Enter the serial number from the nameplate
- *Endress+Hauser Operations app*: Enter serial number from nameplate or scan matrix code on nameplate.

1.3.1 Document function

The following documentation may be available depending on the version ordered:

Document type	Purpose and content of the document
Technical Information (TI)	**Planning aid for your device** The document contains all the technical data on the device and provides an overview of the accessories and other products that can be ordered for the device.
Brief Operating Instructions (KA)	**Guide that takes you quickly to the 1st measured value** The Brief Operating Instructions contain all the essential information from incoming acceptance to initial commissioning.
Operating Instructions (BA)	**Your reference document** The Operating Instructions contain all the information that is required in the various phases of the life cycle of the device: from product identification, incoming acceptance and storage, to mounting, connection, operation and commissioning through to troubleshooting, maintenance and disposal.
Description of Device Parameters (GP)	**Reference for your parameters** The document provides a detailed explanation of each individual parameter. The description is aimed at those who work with the device over the entire life cycle and perform specific configurations.
Safety Instructions (XA)	Depending on the approval, safety instructions for electrical equipment in hazardous areas are also supplied with the device. The Safety Instructions are an integral part of the Operating Instructions. Information on the Safety Instructions (XA) relevant to the device is provided on the nameplate.
Supplementary device-dependent documentation (SD/FY)	Always comply strictly with the instructions in the relevant supplementary documentation. The supplementary documentation is an integral part of the device documentation.

1.4 Registered trademarks

Modbus®
Registered trademark of SCHNEIDER AUTOMATION, INC.

www.nicsanat.com 021-87700210 NIC SANAT نیک صنعت

2 Safety instructions

2.1 Requirements for the personnel

The personnel for installation, commissioning, diagnostics and maintenance must fulfill the following requirements:
- Trained, qualified specialists must have a relevant qualification for this specific function and task.
- Are authorized by the plant owner/operator.
- Are familiar with federal/national regulations.
- Before starting work, read and understand the instructions in the manual and supplementary documentation as well as the certificates (depending on the application).
- Follow instructions and comply with basic conditions.

The operating personnel must fulfill the following requirements:
- Are instructed and authorized according to the requirements of the task by the facility's owner-operator.
- Follow the instructions in this manual.

2.2 Intended use

Application and media
The measuring device described in this manual is intended only for the flow measurement of gases.

Depending on the version ordered, the measuring device can also measure potentially explosive, flammable, poisonous and oxidizing media.

Measuring devices for use in hazardous areas or where the process pressures pose an increased risk, are marked specifically on the nameplate.

To ensure that the measuring device remains in proper condition for the operation time:
- Use the measuring device only for media to which the process-wetted materials are sufficiently resistant.
- Keep within the specified pressure and temperature range.
- Only use the measuring device in full compliance with the data on the nameplate and the general conditions listed in the Operating Instructions and supplementary documentation.
- Check the nameplate to verify if the device ordered can be put to its intended use in the hazardous area (e.g. explosion protection, pressure equipment safety).
- If the ambient temperature of the measuring device is outside the atmospheric range, it is absolutely essential to comply with the relevant basic conditions as specified → 📄 8 in the device documentation.
- Protect the measuring device permanently against corrosion from environmental influences.

Incorrect use
Non-designated use can compromise safety. The manufacturer is not liable for damage caused by improper or non-designated use.

⚠ WARNING

Danger of breakage due to corrosive or abrasive fluids and ambient conditions!
- Verify the compatibility of the process fluid with the sensor material.
- Ensure the resistance of all fluid-wetted materials in the process.
- Keep within the specified pressure and temperature range.

www.nicsanat.com 021-87700210 NIC SANAT نیک صنعت

NOTICE

Verification for borderline cases:

- For special fluids and fluids for cleaning, Endress+Hauser is glad to provide assistance in verifying the corrosion resistance of fluid-wetted materials, but does not accept any warranty or liability as minute changes in the temperature, concentration or level of contamination in the process can alter the corrosion resistance properties.

WARNING

Injury from sensor being ejected!

- The sensor gland should be opened only when in an unpressurized state.

NOTICE

Penetration of dust and moisture when the transmitter housing is opened.

- Only open the transmitter housing briefly, ensuring that no dust or moisture enters the housing.

Residual risks

CAUTION

The electronics and the medium may cause the surfaces to heat up or freeze. Risk of burns or frostbite!

- Mount suitable touch protection.

2.3 Workplace safety

When working on and with the device:

- Wear the required personal protective equipment as per national regulations.

2.4 Operational safety

Damage to the device!

- Operate the device in proper technical condition and fail-safe condition only.
- The operator is responsible for the interference-free operation of the device.

Modifications to the device

Unauthorized modifications to the device are not permitted and can lead to unforeseeable dangers!

- If modifications are nevertheless required, consult with the manufacturer.

Repair

To ensure continued operational safety and reliability:

- Carry out repairs on the device only if they are expressly permitted.
- Observe federal/national regulations pertaining to the repair of an electrical device.
- Use only original spare parts and accessories.

2.5 Product safety

This measuring device is designed in accordance with good engineering practice to meet state-of-the-art safety requirements, has been tested, and left the factory in a condition in which it is safe to operate.

It meets general safety standards and legal requirements. It also complies with the EU directives listed in the device-specific EU Declaration of Conformity. The manufacturer confirms this by affixing the CE mark to the device..

www.nicsanat.com
021-87700210
NIC SANAT
نیک صنعت

2.6 IT security

Our warranty is valid only if the product is installed and used as described in the Operating Instructions. The product is equipped with security mechanisms to protect it against any inadvertent changes to the settings.

IT security measures, which provide additional protection for the product and associated data transfer, must be implemented by the operators themselves in line with their security standards.

2.7 Device-specific IT security

The device offers a range of specific functions to support protective measures on the operator's side. These functions can be configured by the user and guarantee greater in-operation safety if used correctly. The following list provides an overview of the most important functions:

Function/interface	Factory setting	Recommendation
Write protection via hardware write protection switch → 🗎 11	Not enabled	On an individual basis following risk assessment
Access code (also applies to web server login or FieldCare connection) → 🗎 12	Not enabled (0000)	Assign a customized access code during commissioning
WLAN (order option in display module)	Enabled	On an individual basis following risk assessment
WLAN security mode	Enabled (WPA2-PSK)	Do not change
WLAN passphrase (Password) → 🗎 12	Serial number	Assign an individual WLAN passphrase during commissioning
WLAN mode	Access point	On an individual basis following risk assessment
Web server → 🗎 12	Enabled	On an individual basis following risk assessment
CDI-RJ45 service interface→ 🗎 13	–	On an individual basis following risk assessment

2.7.1 Protecting access via hardware write protection

Write access to the parameters of the device via the local display, web browser or operating tool (e.g. FieldCare, DeviceCare) can be disabled via a write protection switch (DIP switch on the main electronics module). When hardware write protection is enabled, only read access to the parameters is possible.

Hardware write protection is disabled when the device is delivered → 🗎 127.

2.7.2 Protecting access via a password

Different passwords are available to protect write access to the device parameters or access to the device via the WLAN interface.

www.nicsanat.com
021-87700210
NIC SANAT
نیک صنعت

- User-specific access code
  Protect write access to the device parameters via the local display, web browser or operating tool (e.g. FieldCare, DeviceCare). Access authorization is clearly regulated through the use of a user-specific access code.
- WLAN passphrase
  The network key protects a connection between an operating unit (e.g. notebook or tablet) and the device via the WLAN interface which can be ordered as an option.
- Infrastructure mode
  When the device is operated in infrastructure mode, the WLAN passphrase corresponds to the WLAN passphrase configured on the operator side.

User-specific access code

Write access to the device parameters via the local display, web browser or operating tool (e.g. FieldCare, DeviceCare) can be protected by the modifiable, user-specific access code (→ 🗎 125).

When the device is delivered, the device does not have an access code and is equivalent to *0000* (open).

WLAN passphrase: Operation as WLAN access point

A connection between an operating unit (e.g. notebook or tablet) and the device via the WLAN interface (→ 🗎 68), which can be ordered as an optional extra, is protected by the network key. The WLAN authentication of the network key complies with the IEEE 802.11 standard.

When the device is delivered, the network key is pre-defined depending on the device. It can be changed via the **WLAN settings** submenu in the **WLAN passphrase** parameter (→ 🗎 112).

Infrastructure mode

A connection between the device and WLAN access point is protected by means of an SSID and passphrase on the system side. Please contact the relevant system administrator for access.

General notes on the use of passwords

- The access code and network key supplied with the device should be changed during commissioning for safety reasons.
- Follow the general rules for generating a secure password when defining and managing the access code and network key.
- The user is responsible for the management and careful handling of the access code and network key.
- For information on configuring the access code or on what to do if you lose the password, for example, see "Write protection via access code" → 🗎 125.

2.7.3 Access via web server

The integrated web server can be used to operate and configure the device via a web browser → 🗎 60. The connection is established via the service interface (CDI-RJ45) or the WLAN interface.

The web server is enabled when the device is delivered. The web server can be disabled via the **Web server functionality** parameter if necessary (e.g. after commissioning).

The device and status information can be hidden on the login page. This prevents unauthorized access to the information.

For detailed information on device parameters, see:
"Description of Device Parameters" document → 🗎 196.

www.nicsanat.com 021-87700210 NIC SANAT نیک صنعت

2.7.4 Access via service interface (CDI-RJ45)

The device can be connected to a network via the service interface (CDI-RJ45). Device-specific functions guarantee the secure operation of the device in a network.

The use of relevant industrial standards and guidelines that have been defined by national and international safety committees, such as IEC/ISA62443 or the IEEE, is recommended. This includes organizational security measures such as the assignment of access authorization as well as technical measures such as network segmentation.

Transmitters with an Ex de approval may not be connected via the service interface (CDI-RJ45)!

Order code for "Approval", options (Ex de): BB, C2, GB, MB, NB

www.nicsanat.com
021-87700210
NIC SANAT
نیک صنعت

3 Product description

The device consists of a transmitter and a sensor.

The device is available as a compact version:
The transmitter and sensor form a mechanical unit.

3.1 Product design

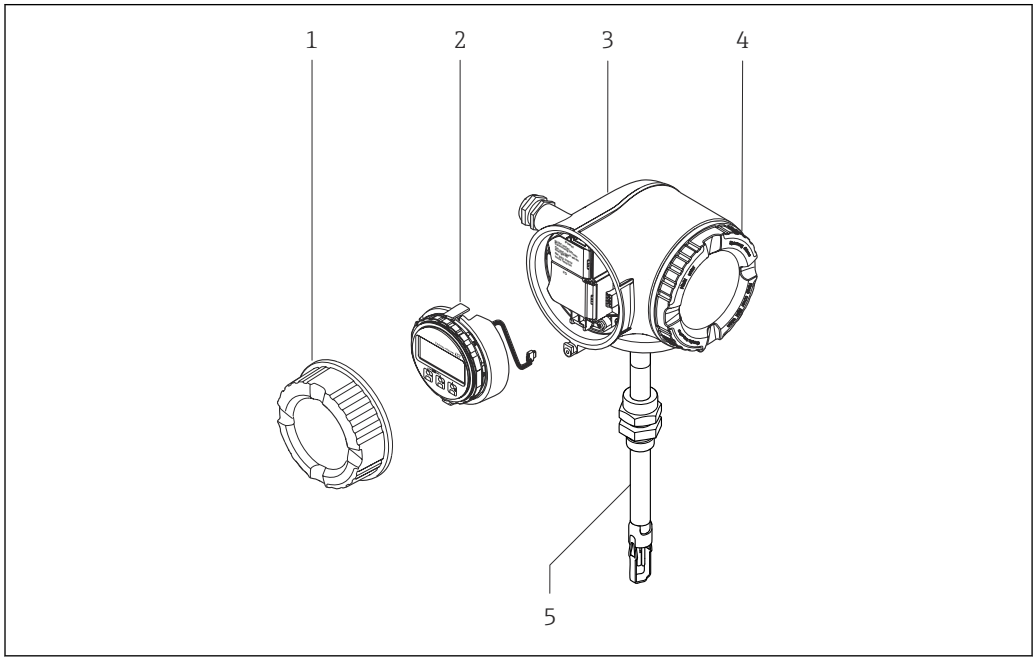

A0042019

1 *Connection compartment cover*
2 *Display module*
3 *Transmitter housing*
4 *Electronics compartment cover*
5 *Sensor*

www.nicsanat.com
021-87700210
NIC SANAT
نیک صنعت

4 Incoming acceptance and product identification

4.1 Incoming acceptance

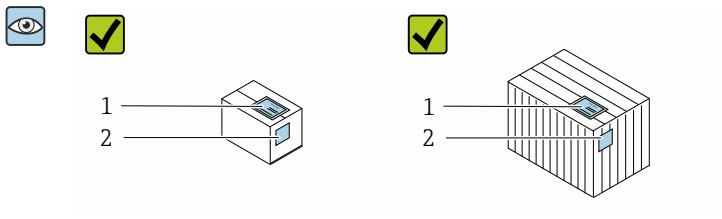

Are the order codes on the delivery note (1) and the product sticker (2) identical?

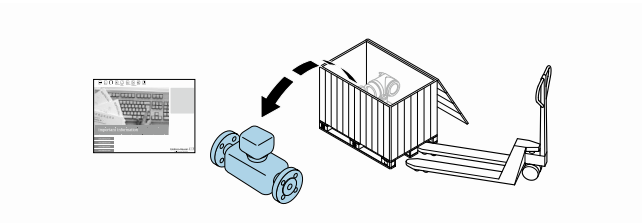

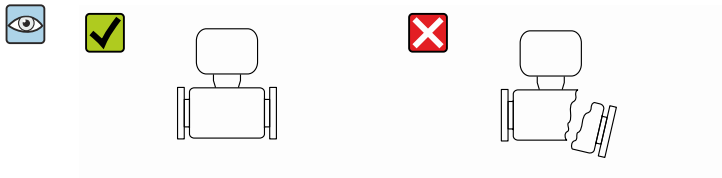

Are the goods undamaged?

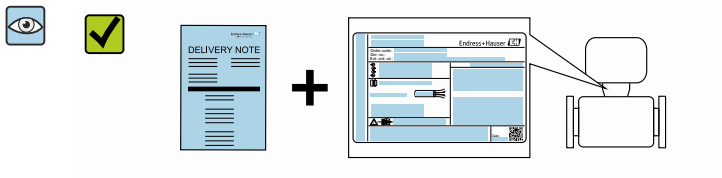

Does the data on the nameplate match the order specifications on the delivery note?

Is the envelope present with accompanying documents?

- If one of the conditions is not satisfied, contact your Endress+Hauser Sales Center.
- The Technical Documentation is available via the Internet or via the *Endress+Hauser Operations app*: Product identification→ 16.

4.2 Product identification

The following options are available for identification of the device:
- Nameplate
- Order code with details of the device features on the delivery note
- Enter the serial numbers from the nameplates in the *Device Viewer* (www.endress.com/deviceviewer): all the information about the device is displayed.
- Enter the serial numbers from the nameplates into the *Endress+Hauser Operations app* or scan the DataMatrix code on the nameplate with the *Endress+Hauser Operations app*: all the information about the device is displayed.

www.nicsanat.com
021-87700210
NIC SANAT

For an overview of the scope of the associated Technical Documentation, refer to the following:

- The "Additional standard documentation on the device" and "Supplementary device-dependent documentation" sections
- The *Device Viewer*: Enter the serial number from the nameplate (www.endress.com/deviceviewer)
- The *Endress+Hauser Operations app*: Enter the serial number from the nameplate or scan the DataMatrix code on the nameplate.

4.2.1 Transmitter nameplate

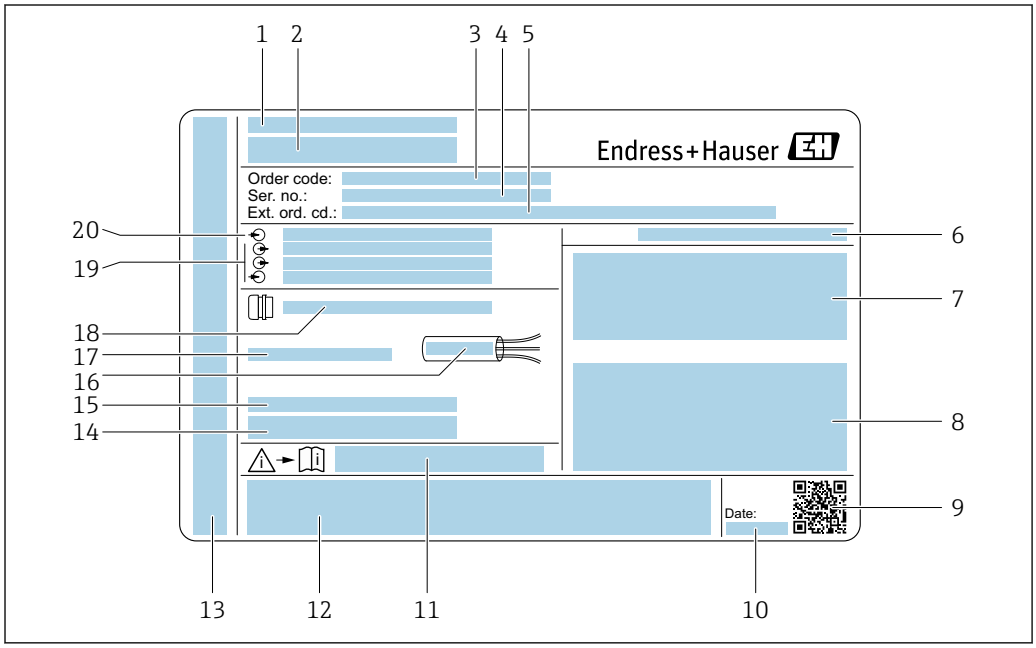

1 *Example of a transmitter nameplate*

1 *Manufacturer address/certificate holder*
2 *Name of the transmitter*
3 *Order code*
4 *Serial number*
5 *Extended order code*
6 *Degree of protection*
7 *Space for approvals: use in hazardous areas*
8 *Electrical connection data: available inputs and outputs*
9 *2-D matrix code*
10 *Date of manufacture: year-month*
11 *Document number of safety-related supplementary documentation*
12 *Space for approvals and certificates: e.g. CE mark, RCM tick*
13 *Space for degree of protection of connection and electronics compartment when used in hazardous areas*
14 *Firmware version (FW) and device revision (Dev. rev.) from the factory*
15 *Space for additional information in the case of special products*
16 *Permitted temperature range for cable*
17 *Permitted ambient temperature (T_a)*
18 *Information on cable gland*
19 *Available inputs and outputs, supply voltage*
20 *Electrical connection data: supply voltage*

www.nicsanat.com 021-87700210 NIC SANAT نیک صنعت

4.2.2 Sensor nameplate

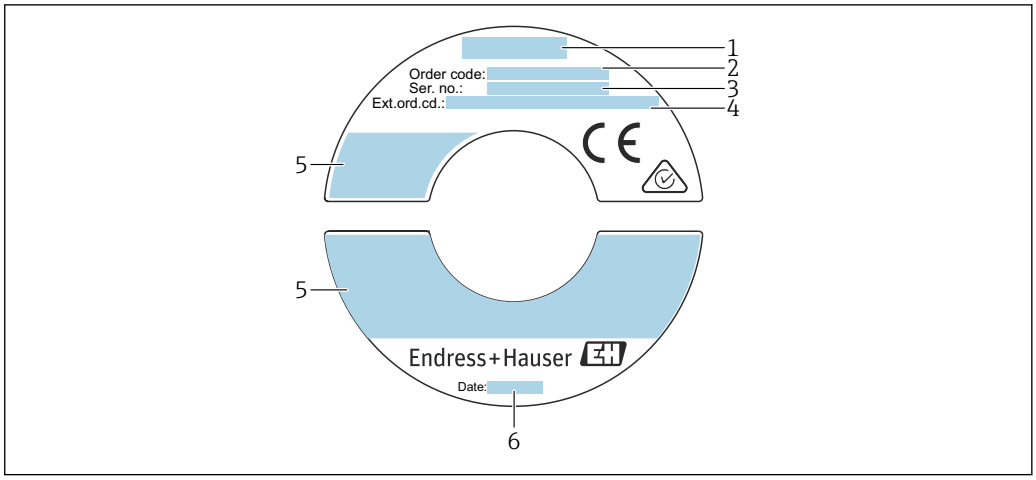

2 Example of sensor nameplate

1 *Name of sensor*
2 *Order code*
3 *Serial number*
4 *Extended order code*
5 *Flow; length of sensor; pressure rating; nominal pressure; system pressure; medium temperature range; permitted ambient temperature range (T_a); explosion protection approval information, Pressure Equipment Directive and degree of protection*
6 *Date of manufacture: year-month*

Order code
The measuring device is reordered using the order code.

Extended order code
- The device type (product root) and basic specifications (mandatory features) are always listed.
- Of the optional specifications (optional features), only the safety and approval-related specifications are listed (e.g. LA). If other optional specifications are also ordered, these are indicated collectively using the # placeholder symbol (e.g. #LA#).
- If the ordered optional specifications do not include any safety and approval-related specifications, they are indicated by the + placeholder symbol (e.g. XXXXXX-ABCDE +).

4.2.3 Symbols on the device

Symbol	Meaning
⚠	**WARNING!** This symbol alerts you to a dangerous situation. Failure to avoid this situation can result in serious or fatal injury. Please consult the documentation for the measuring device to discover the type of potential danger and measures to avoid it.
📖	**Reference to documentation** Refers to the corresponding device documentation.
⏚	**Protective ground connection** A terminal that must be connected to the ground prior to establishing any other connections.

www.nicsanat.com 021-87700210 NIC SANAT نیک صنعت

4.3 Storage and transport

4.3.1 Storage conditions

Observe the following notes for storage:
- Store in the original packaging to ensure protection from shock.
- Do not remove protective covers or protective caps installed on process connections. They prevent mechanical damage to the sealing surfaces and contamination in the measuring tube.
- Protect from direct sunlight. Avoid unacceptably high surface temperatures.
- Select a storage location that excludes the possibility of condensation forming on the measuring device. Fungi and bacteria can damage the liner.
- Store in a dry and dust-free place.
- Do not store outdoors.

Storage temperature → 📄 180

4.3.2 Transporting the product

Transport the measuring device to the measuring point in the original packaging.

ℹ Do not remove protection caps. They prevent mechanical damage.

4.3.3 Packaging disposal

All packaging materials are environmentally friendly and 100% recyclable:
- Outer packaging of device
  Stretch wrap made of polymer in accordance with EU Directive 2002/95/EC (RoHS)
- Packaging
  - Wood crate treated in accordance with ISPM 15 standard, confirmed by IPPC logo
  - Cardboard box in accordance with European packaging guideline 94/62/EC, recyclability confirmed by Resy symbol
- Transport material and fastening fixtures
  - Disposable plastic pallet
  - Plastic straps
  - Plastic adhesive strips
- Filler material
  Paper pads

www.nicsanat.com 021-87700210 NIC SANAT نیک صنعت

5 Mounting

5.1 Mounting requirements

- The recommended inlet and outlet specifications must be observed.
- The piping system and the device must be installed according to good engineering practice.
- Ensure the correct alignment and orientation of the sensor.
- Take measures to avoid or prevent condensation (e.g. condensation trap, thermal insulation etc.).
- Observe the maximum permissible ambient temperatures and medium temperature range.
- Install the measuring device in a shady location or use a weather protection cover.
- For mechanical reasons and to protect the pipe, support is recommended for heavy sensors (e.g. with a hot-tap retractable assembly).

5.1.1 Installation position

Orientation

The direction of flow must match the direction of the arrow on the sensor. In the case of the bidirectional sensor, the arrow points in the positive direction. When performing bidirectional measurement, the sensing element must be installed with an accuracy of 3°.

Orientation		Recommendation
Vertical orientation	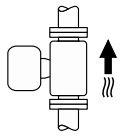 A0015591	✓ 1)
Horizontal orientation, transmitter head up	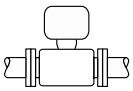 A0015589	✓✓
Horizontal orientation, transmitter head down	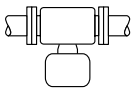 A0015590	✓ 2)
Horizontal orientation, transmitter head at side	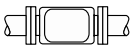 A0015592	✓
Inclined orientation, transmitter head down	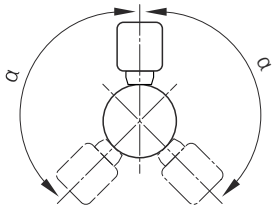 A0015773	✓ 2)

1) In the case of saturated or impure gases, vertical orientation is preferred in order to minimize condensation or contamination. For bidirectional sensors, select horizontal orientation.
2) Select inclined orientation (α = approx. 135°) for very wet or water-saturated gas (e.g. digester gas, undried compressed air), or if deposits or condensate are constantly present.

www.nicsanat.com
021-87700210
NIC SANAT
نیک صنعت

Pipes

The measuring device must be professionally installed, and the following points must be observed:

- Weld pipes professionally.
- Use seals of the correct size.
- Align flanges and seals correctly.
- Remove protection cap from sensing element.

- Following installation, the pipe must be free from dirt and particles in order to avoid damage to the sensors.
- For further information → ISO standard 14511.

Sensor selection and arrangement

The minimum length of the sensor can be determined using the Endress+Hauser Applicator program (version 10.00 or higher) or with the calculation formula below.

The minimum length of the sensor is determined by the necessary insertion depth. The calculated necessary insertion depth must be within the adjusting range of the selected insertion version.

Insertion depth

The minimum length of the insertion version can be determined using the Endress+Hauser Applicator program or with the calculation formula below. The calculated necessary insertion depth must be within the adjusting range of the selected insertion version.

NOTICE

Metal ferrules undergo plastic deformation during the initial installation.
As a result the insertion depth is fixed after initial installation and the ferrules can no longer be replaced.

- ▶ Pay attention to information on preconditions and on determining the insertion depth.
- ▶ Check the insertion depth closely before tightening the ferrules.

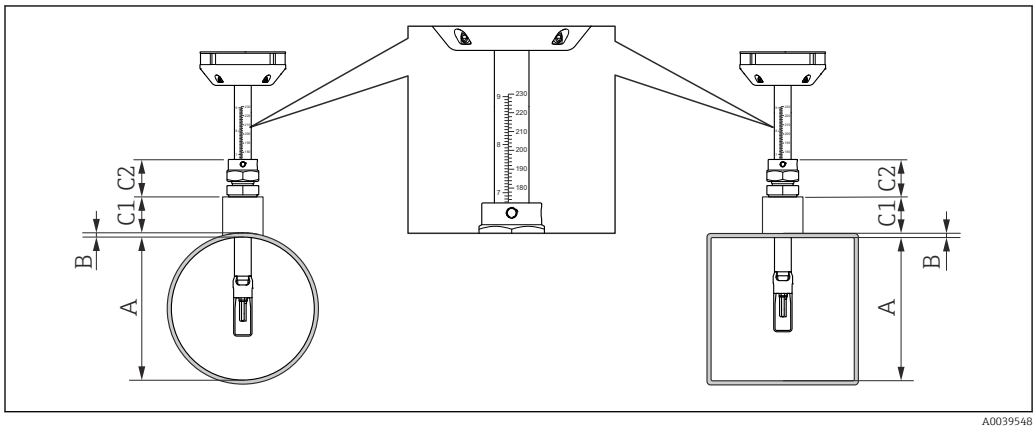

3 Determine the dimensions A, B, C1 and C2

A In the case of a circular pipe: the pipe internal diameter (DN); in the case of a duct: the inner dimension
B Thickness of pipe wall or of duct wall
C1 Mounting kit
C2 Sensor's compression fitting

Calculating the insertion depth

Insertion depth = (0.3· A) + B + (C1 + C2)

The insertion depth must be at least 100mm.

www.nicsanat.com 021-87700210 NIC SANAT نیک صنعت

Determining dimensions C1 and C2

If only Endress+Hauser mounting bosses are used

Mounting boss 1" NPT	C1 + C2 = 112 mm (4.409 in)
Mounting boss G1"	C1 + C2 = 106 mm (4.173 in)
Mounting boss ¾" NPT	C1 + C2 = 108 mm (4.252 in)
Mounting boss G¾"	C1 + C2 = 105 mm (4.134 in)

If a cold/hot tap is used, use dimension "L" → 184 instead of "C1".

Use Applicator to determine dimensions C1 and C2 if using other E+H mounting kits (e.g. cold/hot taps).

If not exclusively using Endress+Hauser mounting bosses

C1	Length of pipe connection used
C2 (compression fitting with 1" NPT thread)	52 mm (2.047 in)
C2 (compression fitting with G1" thread)	46 mm (1.811 in)
C2 (compression fitting with ¾" NPT thread)	48 mm (1.889 in)
C2 (compression fitting with G¾" thread)	45 mm (1.772 in)

Selecting the length of the insertion version

Select the length of the insertion version using the calculated insertion depth and the following table. The insertion depth must be within the adjusting range of the insertion version.

Length of insertion tube		Adjusting range (insertion depth)	
[mm]	[in]	[mm]	[in]
235	9	100 to 235	3.9 to 9.3
335	13	100 to 335	3.9 to 13.2
435	17	100 to 435	3.9 to 17.1
608	24	100 to 608	3.9 to 23.9

Inlet and outlet runs

A fully developed flow profile is a requirement for optimal thermal flow measurement.

To achieve the best possible measuring performance, observe the following inlet and outlet runs at the very minimum.

- In the case of bidirectional sensors, also observe the recommended inlet run in the opposite direction.
- If several flow disturbances are present, use flow conditioners.
- Use flow conditioners if it is not possible to observe the required inlet runs.
- In the case of control valves, the amount of disturbance depends on the valve type and opening degree. The recommended inlet run for control valves is 50 × DN.
- In the case of very light gases (helium, hydrogen), the recommended inlet run must be doubled.

www.nicsanat.com
021-87700210
NIC SANAT
نیک صنعت

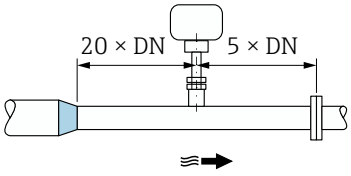

4 *Reduction*

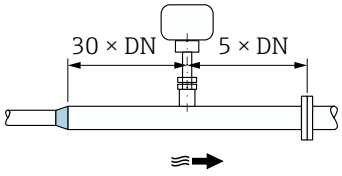

5 *Expansion*

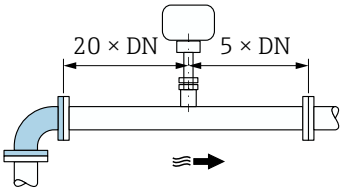

6 *90° elbow*

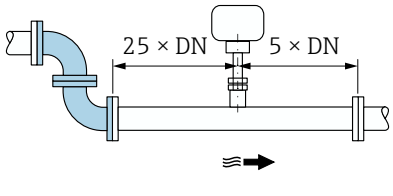

7 *2 × 90° elbow*

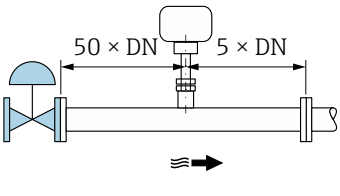

8 *Control valve*

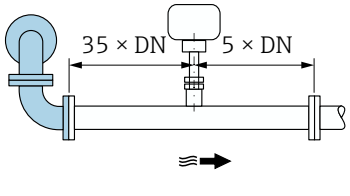

9 *2 × 90 ° elbow, 3-dimensional*

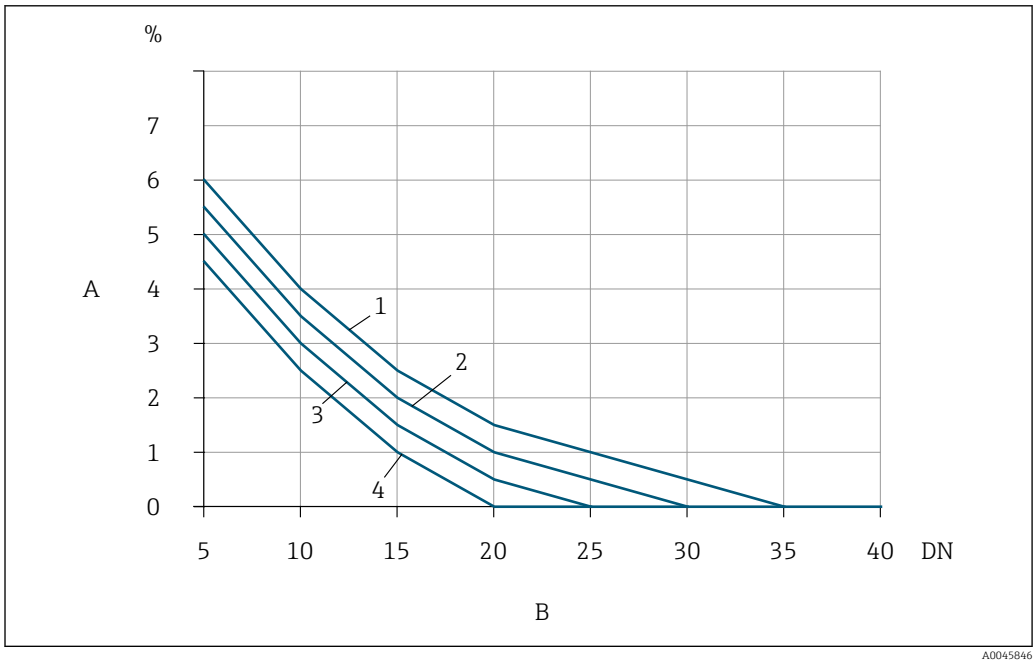

10 *The additional measured error to be expected without flow conditioners depending on the disturbance type and inlet run*

A *Additional measured error (%)*
B *Inlet run (DN)*
1 *2 × 90 ° elbow, 3-dimensional*
2 *Expansion*
3 *2 × 90° elbow*
4 *Reduction or 90° elbow*

Flow conditioner

Use flow conditioners if it is not possible to observe the required inlet runs. Flow conditioners improve the flow profile and therefore reduce the necessary inlet runs.

www.nicsanat.com
021-87700210
NIC SANAT
نیک صنعت

Mount the flow conditioner in flow direction in front of the measuring device.

Available in the following flange standards:
- ASME B16.5 Cl. 150/Cl. 300
- EN 1092-1 PN10/PN16/PN25/PN40
- JIS B2220 10K/20K

Available in the following line sizes:
- DN 80 (3")
- DN 100 (4")
- DN 150 (6")
- DN 200 (8")
- DN 250 (10")
- DN 300 (12")

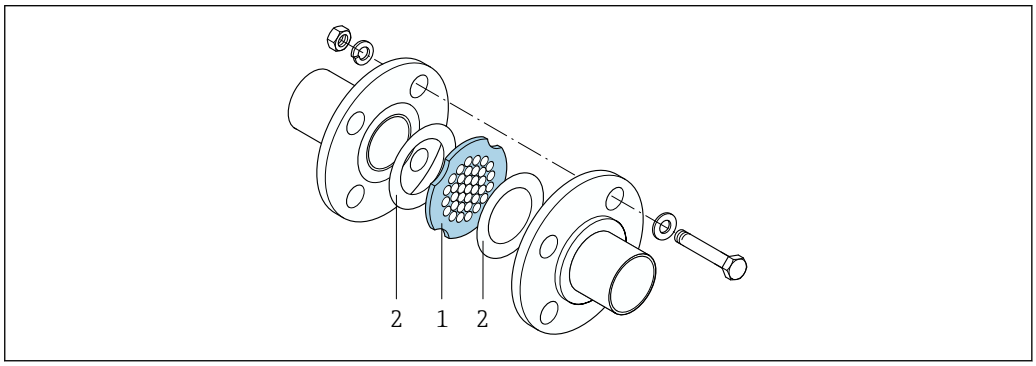

A0039538

1 Flow conditioner
2 Seal

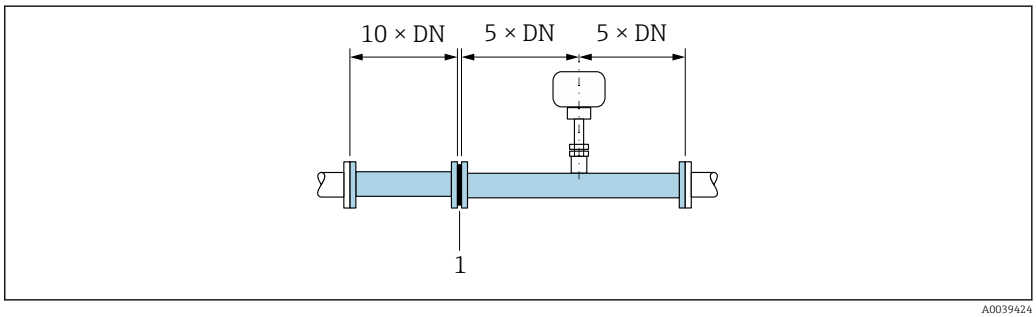

A0039424

11 Recommended inlet and outlet runs when using a flow conditioner

1 Flow conditioner

In the case of bidirectional sensors, also observe the inlet run in the opposite direction.

www.nicsanat.com
021-87700210
NIC SANAT
نیک صنعت

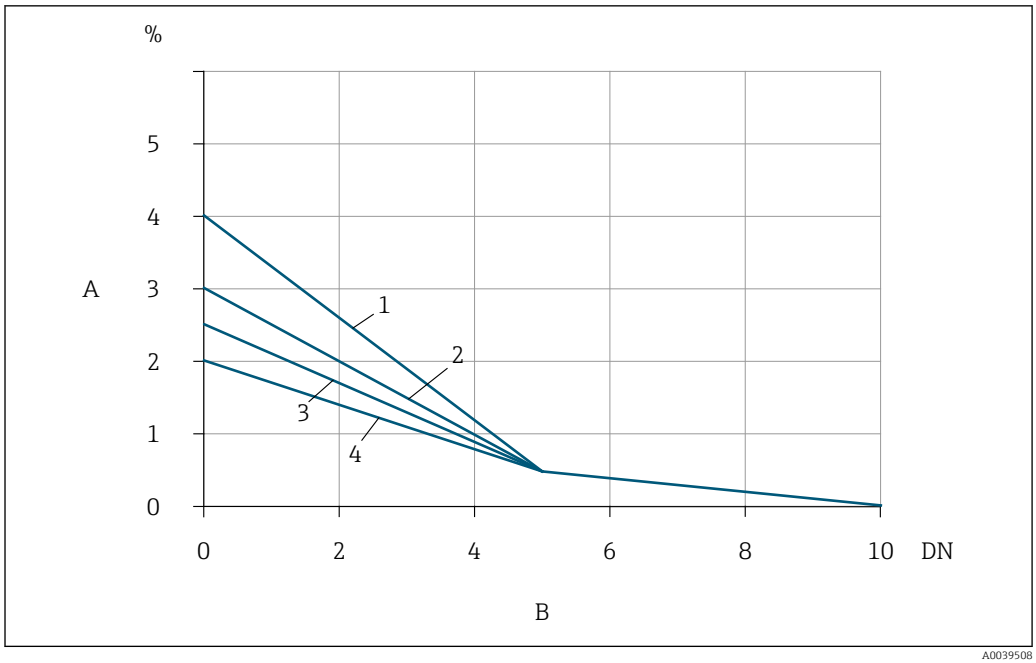

12 The additional measured error to be expected with flow conditioners depending on the disturbance type and inlet run

A Additional measured error (%)
B Inlet runs upstream of the flow conditioner (DN)
1 2 × 90 ° elbow, 3-dimensional
2 Expansion
3 2 × 90° elbow
4 Reduction or 90° elbow

The pressure loss for flow conditioners is calculated as follows: Δp [mbar] = 0.0085 · ρ [kg/m^3] · v^2 [m/s]

Example of air

p = 10 bar abs.

t = 25 °C → ρ = 11.71 kg/m^3

v = 10 m/s

$\Delta p = 0.0085 \cdot 11.71 \cdot 10^2 = 9.95$ mbar

ρ : density of the process medium
v: average flow velocity
abs. = absolute

Outlet runs with pressure measuring points

Install the pressure measuring point downstream of the measuring system. This prevents the pressure transmitter from potentially affecting the flow in the measuring point.

www.nicsanat.com
021-87700210
NIC SANAT
نیک صنعت

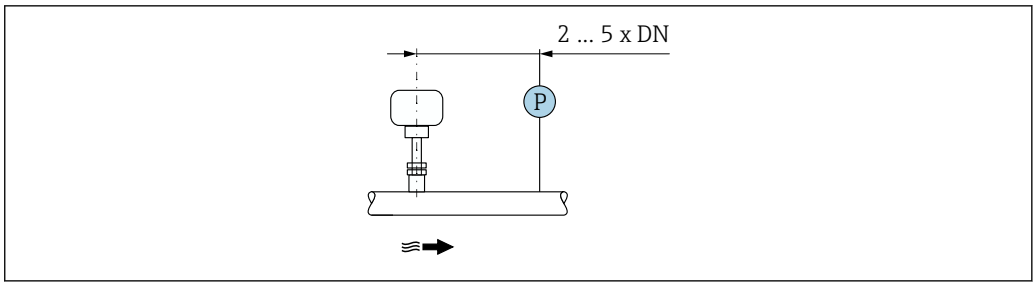

13 *Installation of a pressure measuring point (P = pressure transmitter)*

Installation conditions for nipples

Suitable support brackets must be used if installing in rectangular air ducts (or pipes with thin walls).

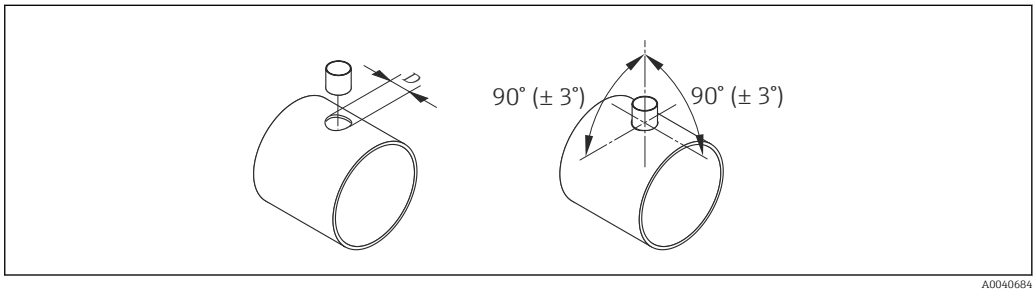

D Ø 31.0 ± 0.5 mm (1.22 ± 0.019 in)

5.1.2 Environment and process requirements

Ambient temperature range

Measuring device	▪ −40 to +60 °C (−40 to +140 °F) ▪ Order code for "Test, certificate", option JP: −50 to +60 °C (−58 to +140 °F)
Readability of the local display	−20 to +60 °C (−4 to +140 °F) The readability of the display may be impaired at temperatures outside the temperature range.

NOTICE

Danger of overheating

- ▶ Ensure that the temperature at the lower end of the transmitter housing does not exceed 80 °C (176 °F).
- ▶ Ensure that sufficient convection takes place at the transmitter neck.
- ▶ When using in potentially explosive atmospheres, observe the information in the device-specific Ex documentation. For detailed information on the temperature tables, see the separate document entitled "Safety Instructions" (XA) for the device.
- ▶ Ensure that a sufficiently large area of the transmitter neck remains exposed. The uncovered part serves as a radiator and protects the electronics from overheating and excessive cooling.

- ▶ If operating outdoors:
  Avoid direct sunlight, particularly in warm climatic regions.

You can order a weather protection cover from Endress+Hauser→ 161.

www.nicsanat.com
021-87700210
NIC SANAT
نیک صنعت

System pressure

Pressure-reducing valves and some compressor systems can generate significant process pressure variations that can distort the flow profile. This can produce an additional measured error. Suitable measures must be taken to reduce these pressure pulses, such as:

- The use of expansion tanks
- The use of inlet diffusers
- Positioning the measuring device further downstream

To avoid pulsating flow and contamination from oil/dirt in compressed air applications, it is recommended to install the measuring device downstream of filter, drying and storage devices. Do not install the measuring device directly after the compressor.

Thermal insulation

In the case of some fluids, it is important to keep the heat radiated from the sensor to the transmitter to a low level. A wide range of materials can be used for the required insulation.

If the gas is very wet or saturated with water (e.g. digester gas), the pipe and the sensor housing should be insulated, and heated where necessary, to prevent water droplets condensing on the sensing element.

NOTICE

Electronics overheating on account of thermal insulation!

- ▶ Recommended orientation: horizontal orientation, transmitter housing pointing downwards.
- ▶ Do not insulate the transmitter housing .
- ▶ Maximum permissible temperature at the lower end of the transmitter housing: 80 °C (176 °F)
- ▶ Thermal insulation with not isolated extended neck: We recommend that you do not insulate the extended neck in order to ensure optimum dissipation of heat.

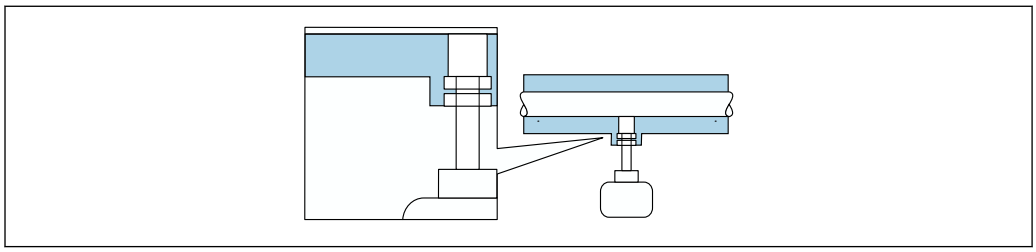

A0039420

14 Thermal insulation with not isolated extended neck

Heating

NOTICE

Electronics can overheat due to elevated ambient temperature!

- ▶ Observe maximum permitted ambient temperature for the transmitter.
- ▶ Depending on the medium temperature, take the device orientation requirements into account.

NOTICE

Electronics overheating on account of thermal insulation!

- ▶ Recommended orientation: horizontal orientation, transmitter housing pointing downwards.
- ▶ Do not insulate the transmitter housing .
- ▶ Maximum permissible temperature at the lower end of the transmitter housing: 80 °C (176 °F)
- ▶ Thermal insulation with extended neck free: We recommend that you do not insulate the extended neck in order to ensure optimum dissipation of heat.

www.nicsanat.com
021-87700210
NIC SANAT
نیک صنعت

NOTICE

Danger of overheating when heating

- Ensure that the temperature at the lower end of the transmitter housing does not exceed 80 °C (176 °F).
- Ensure that sufficient convection takes place at the transmitter neck.
- When using in potentially explosive atmospheres, observe the information in the device-specific Ex documentation. For detailed information on the temperature tables, see the separate document entitled "Safety Instructions" (XA) for the device.
- Ensure that a sufficiently large area of the transmitter neck remains exposed. The uncovered part serves as a radiator and protects the electronics from overheating and excessive cooling.

Heating options

If a fluid requires that no heat loss should occur at the sensor, users can avail of the following heating options:
- Electrical heating, e.g. with electric band heaters
- Via pipes carrying hot water or steam

Vibrations

NOTICE

Strong vibrations can damage the measuring device.

Can result in damage to the measuring device or the fastening units.
- Pay attention to information on the vibration and shock resistance → 180

5.1.3 Special mounting instructions

Zero adjust

All measuring devices are calibrated in accordance with state-of-the-art technology. Calibration takes place under reference conditions . Therefore, a zero adjustment in the field is generally not required.

Experience shows that zero adjustment is advisable only in special cases:
- If strict measuring accuracy requirements apply.
- Under extreme process or operating conditions, e.g., very high process temperatures or light gases (helium, hydrogen).

Weather protection cover

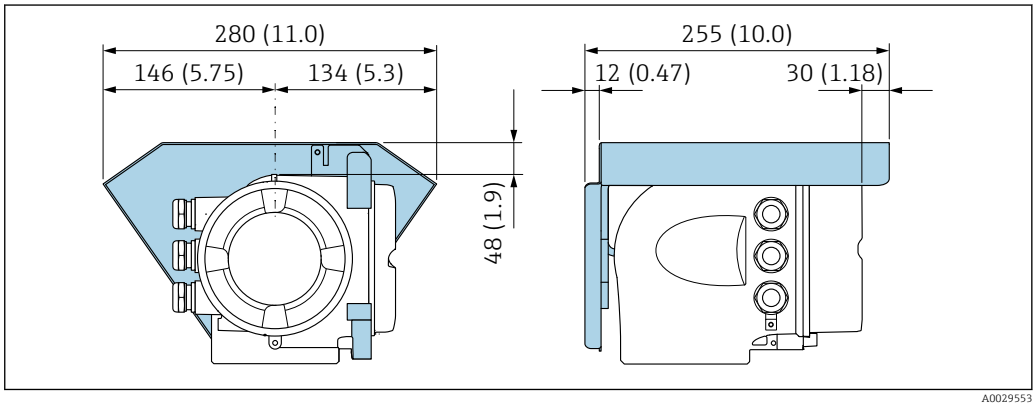

15 *Engineering unit mm (in)*

www.nicsanat.com
021-87700210
NIC SANAT
نیک صنعت

5.2 Mounting the measuring device

5.2.1 Required tool

For sensor

Sensor's compression fitting: appropriate mounting tool.

5.2.2 Preparing the measuring device

1. Remove all remaining transport packaging.
2. Remove any protective covers or protective caps present from the sensor.
3. Remove stick-on label on the electronics compartment cover.

5.2.3 Mounting the measuring device

WARNING

Danger due to improper process sealing!

- Ensure that the seals are clean and undamaged.
- Ensure that the correct sealing material is used (e.g. Teflon tape for NPT compression fitting).
- Secure the seals correctly.

Install the measuring device or turn the transmitter housing so that the cable entries do not point upwards.

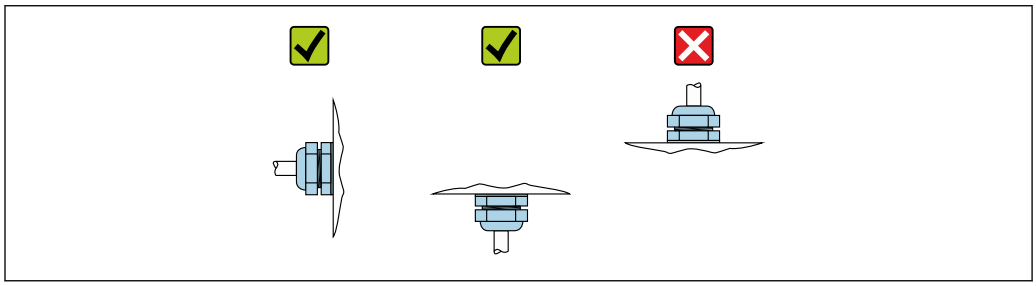

A0029263

1. Weld in the mounting boss in accordance with the requirements.
2. Loosen the union nut (1) and push down the compression fitting (2).

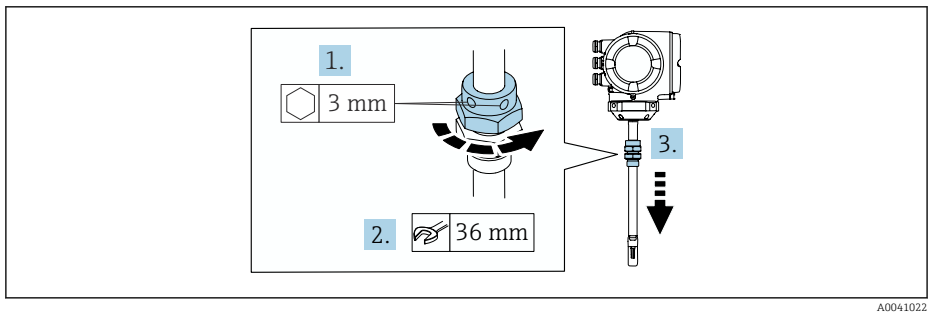

A0041022

www.nicsanat.com
021-87700210
NIC SANAT
نیک صنعت

3. **NOTICE**

Damage to the sensing element!

▶ Make sure the sensing elements do not hit against anything.

Using a wrench (27 mm / 35 mm / 41 mm), tighten the bottom nut of the compression fitting to the end stop.

↳

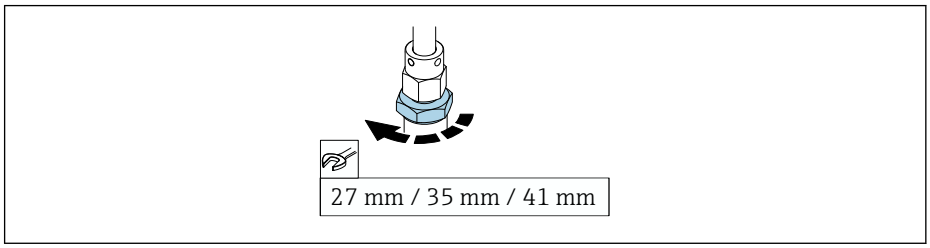

A0036810

4. Now read off the previously calculated insertion depth from the scale and insert the sensor until this value is at the same height as the upper end of the compression fitting.

5. Tighten the union nut by hand. It should still be possible to move the sensor slightly.

↳

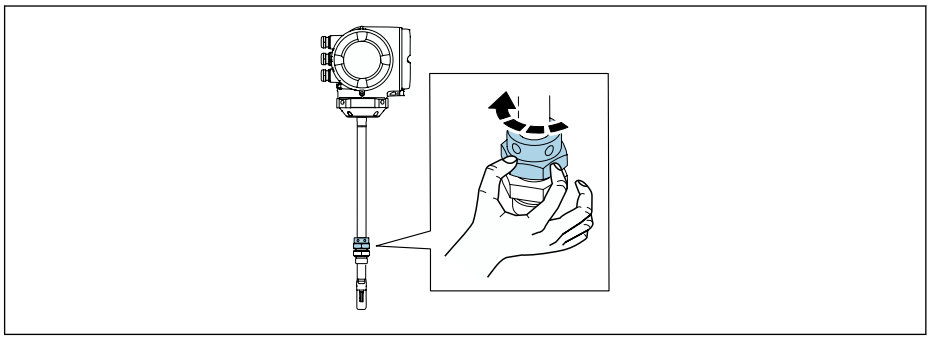

A0041024

6. Align the sensor with the flow direction.

↳ Pay attention to the direction of the arrow on the neck section of the sensor for the flow direction.
The maximum permitted deviation from the flow direction is 3°.

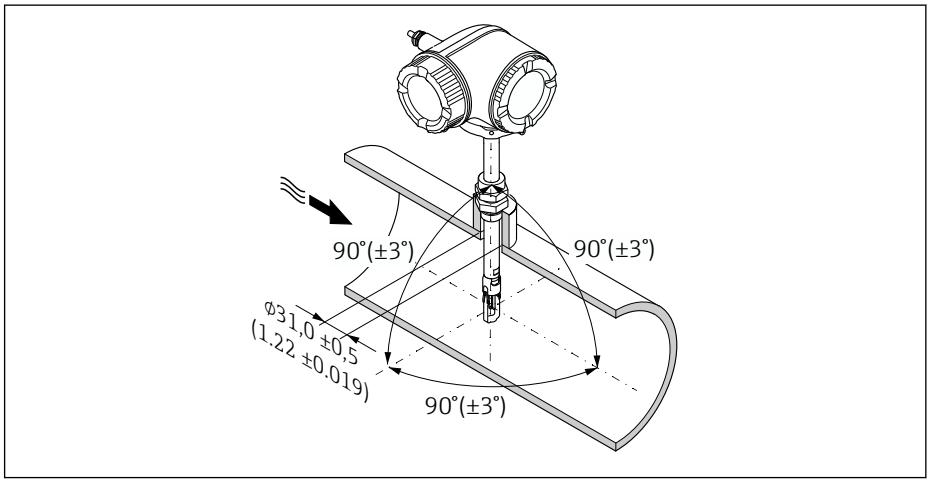

A0039511

16 Engineering unit: mm (in)

7. **Depending on the process connection:**

Tighten union nut with x turns:

↳ For PEEK ferrules continue with Step 8.
For metal ferrules continue with Step 9.

www.nicsanat.com
021-87700210
NIC SANAT
نیک صنعت

8. **For PEEK ferrules:**
   Mounting for the first time: tighten union nut with 1¼ turns. Repeat mounting: tighten union nut with 1 turn.
   ↳ **Tip** If strong vibrations can be expected, tighten the union nut with 1½ turns when mounting for the first time.
9. **For metal ferrules:**
   Mounting for the first time: tighten union nut with 1¼ turns. Repeat mounting: tighten union nut with ¼ turn.
10. Tighten both fixing screws again with a 3 mm (⅛ in) Allen screw with 4 Nm (2.95 lbf ft).
    ↳ It is now no longer possible to move the sensor.
11. Check the measuring point for leaks (max. process pressure).

5.2.4 Turning the transmitter housing

To provide easier access to the connection compartment or display module, the transmitter housing can be turned.

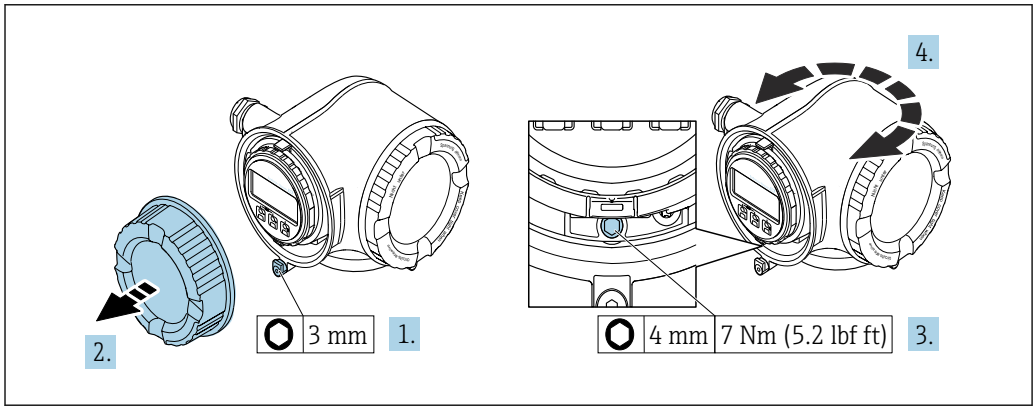

17 *Non-Ex housing*

1. Depending on the device version: Loosen the securing clamp of the connection compartment cover.
2. Unscrew the connection compartment cover.
3. Loosen the securing screw.
4. Turn the housing to the desired position.
5. Tighten the securing screw.
6. Screw on the connection compartment cover.
7. Depending on the device version: Attach the securing clamp of the connection compartment cover.

www.nicsanat.com 021-87700210 NIC SANAT نیک صنعت

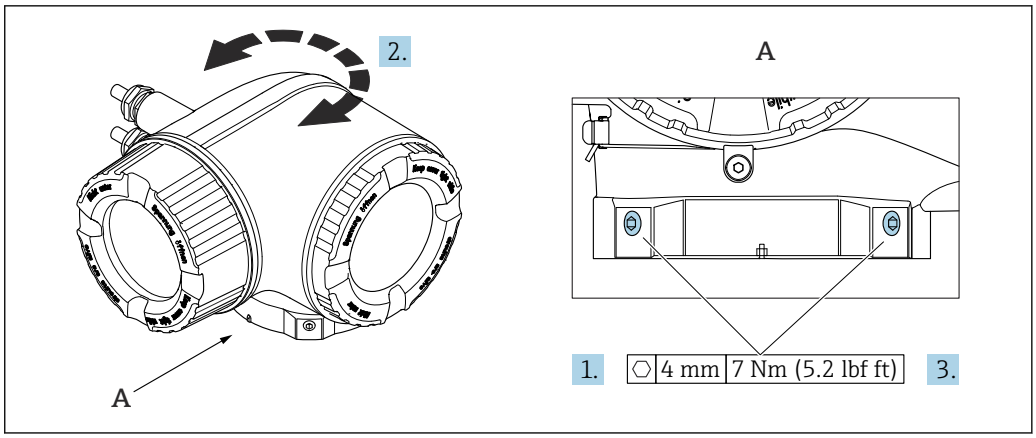

18 *Ex housing*

1. Loosen the fixing screws.
2. Turn the housing to the desired position.
3. Tighten the securing screws.

5.2.5 Turning the display module

The display module can be turned to optimize display readability and operability.

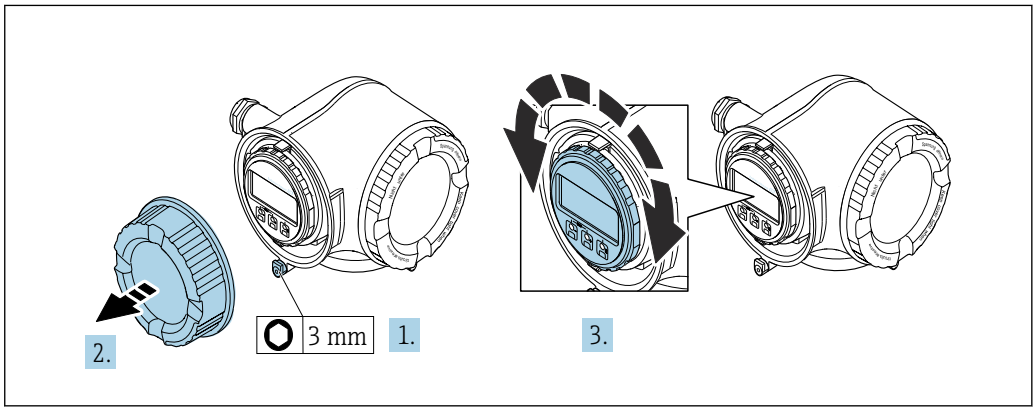

1. Depending on the device version: Loosen the securing clamp of the connection compartment cover.
2. Unscrew the connection compartment cover.
3. Turn the display module to the desired position: max. 8 × 45° in each direction.
4. Screw on the connection compartment cover.
5. Depending on the device version: Attach the securing clamp of the connection compartment cover.

www.nicsanat.com
021-87700210
NIC SANAT
نیک صنعت

5.3 Post-installation check

Is the device undamaged (visual inspection)?	❑
Does the measuring device conform to the measuring point specifications? For example: ▪ Process temperature → 🗎 182 ▪ Process pressure (refer to the "Pressure-temperature ratings" section of the "Technical Information" document) ▪ Ambient temperature → 🗎 25 ▪ Measuring range → 🗎 166	❑
Has the correct orientation been selected for the sensor → 🗎 19? ▪ According to sensor type ▪ According to medium properties ▪ According to medium temperature ▪ According to process pressure	❑
Does the arrow on the sensor match the actual direction of flow of the medium through the piping ?	❑
Have sufficient inlet and outlet runs been provided upstream and downstream of the measuring point → 🗎 21?	❑
Correct sensor insertion depth?	❑
Is the device adequately protected from precipitation and direct sunlight?	❑
Is the device protected against overheating?	❑
Is the device protected against excessive vibrations?	❑
Gas property checked (e.g. purity, dryness, cleanness)?	❑
Are the measuring point identification and labeling correct (visual inspection)?	❑
Are the securing screw and securing clamp tightened securely?	❑

www.nicsanat.com
021-87700210
NIC SANAT
نیک صنعت

6 Electrical connection

⚠ WARNING

Live parts! Incorrect work performed on the electrical connections can result in an electric shock.

- ▶ Set up a disconnecting device (switch or power-circuit breaker) to easily disconnect the device from the supply voltage.
- ▶ In addition to the device fuse, include an overcurrent protection unit with max. 10 A in the plant installation.

6.1 Electrical safety

In accordance with applicable national regulations.

6.2 Connecting requirements

6.2.1 Required tools

- For cable entries: Use corresponding tools
- For securing clamp: Allen key 3 mm
- Wire stripper
- When using stranded cables: Crimper for wire end ferrule
- For removing cables from terminal: Flat blade screwdriver ≤ 3 mm (0.12 in)

6.2.2 Requirements for connecting cable

The connecting cables provided by the customer must fulfill the following requirements.

Protective grounding cable for the outer ground terminal

Conductor cross-section < 2.1 mm^2 (14 AWG)

The use of a cable lug enables the connection of larger cross-sections.

The grounding impedance must be less than 2 Ω.

Permitted temperature range

- The installation guidelines that apply in the country of installation must be observed.
- The cables must be suitable for the minimum and maximum temperatures to be expected.

Power supply cable (incl. conductor for the inner ground terminal)

Standard installation cable is sufficient.

Signal cable

Modbus RS485

The EIA/TIA-485 standard specifies two types of cable (A and B) for the bus line which can be used for every transmission rate. Cable type A is recommended.

Cable type	A
Characteristic impedance	135 to 165 Ω at a measuring frequency of 3 to 20 MHz
Cable capacitance	< 30 pF/m
Wire cross-section	> 0.34 mm^2 (22 AWG)

www.nicsanat.com 021-87700210 NIC SANAT نیک صنعت

Cable type	Twisted pairs
Loop resistance	≤110 Ω/km
Signal damping	Max. 9 dB over the entire length of the cable cross-section
Shield	Copper braided shielding or braided shielding with foil shield. When grounding the cable shield, observe the grounding concept of the plant.

Current output 0/4 to 20 mA

Standard installation cable is sufficient

Pulse /frequency /switch output

Standard installation cable is sufficient

Relay output

Standard installation cable is sufficient.

Current input 0/4 to 20 mA

Standard installation cable is sufficient

Status input

Standard installation cable is sufficient

Cable diameter

- Cable glands supplied:
  M20 × 1.5 with cable ⌀ 6 to 12 mm (0.24 to 0.47 in)
- Spring-loaded terminals: Suitable for strands and strands with ferrules.
  Conductor cross-section 0.2 to 2.5 mm^2 (24 to 12 AWG).

Requirements for connecting cable – remote display and operating module DKX001

Optionally available connecting cable

A cable is supplied depending on the order option
- Order code for measuring device: order code **030** for "Display; operation", option **O**
  or
- Order code for measuring device: order code **030** for "Display; operation", option **M**
  and
- Order code for DKX001: order code **040** for "Cable", option **A, B, D, E**

Standard cable	2 × 2 × 0.34 mm^2 (22 AWG) PVC cable with common shield (2 pairs, pair-stranded)
Flame resistance	According to DIN EN 60332-1-2
Oil resistance	According to DIN EN 60811-2-1
Shield	Tin-plated copper braid, optical cover ≥ 85 %
Capacitance: core/shield	≤ 200 pF/m
L/R	≤ 24 µH/Ω
Available cable length	5 m (15 ft)/10 m (35 ft)/20 m (65 ft)/30 m (100 ft)
Operating temperature	When mounted in a fixed position: −50 to +105 °C (−58 to +221 °F); when cable can move freely: −25 to +105 °C (−13 to +221 °F)

www.nicsanat.com 021-87700210 NIC SANAT نیک صنعت

Standard cable - customer-specific cable

With the following order option, no cable is supplied with the device and must be provided by the customer:
Order code for DKX001: Order code **040** for "Cable", option **1** "None, provided by customer, max 300 m"

A standard cable with the following minimum requirements can be used as the connecting cable, even in the hazardous area (Zone 2, Class I, Division 2 and Zone 1, Class I, Division 1):

Standard cable	4 wires (2 pairs); pair-stranded with common shield, minimum wire cross-section 0.34 mm^2 (22 AWG)
Shield	Tin-plated copper braid, optical cover ≥ 85 %
Cable impedance (pair)	Minimum 80 Ω
Cable length	Maximum 300 m (1 000 ft), maximum loop impedance 20 Ω
Capacitance: core/shield	Maximum 1 000 nF for Zone 1, Class I, Division 1
L/R	Maximum 24 µH/Ω for Zone 1, Class I, Division 1

www.nicsanat.com
021-87700210
NIC SANAT
نیک صنعت

6.2.3 Terminal assignment

Transmitter: supply voltage, input/outputs

The terminal assignment of the inputs and outputs depends on the individual order version of the device. The device-specific terminal assignment is documented on an adhesive label in the terminal cover.

Supply voltage		Input/output 1		Input/output 2		Input/output 3	
1 (+)	2 (–)	26 (B)	27 (A)	24 (+)	25 (–)	22 (+)	23 (–)
		Device-specific terminal assignment: adhesive label in terminal cover.					

Terminal assignment of the remote display and operating module → 40.

6.2.4 Shielding and grounding

Shielding and grounding concept

1. Maintain electromagnetic compatibility (EMC).
2. Take explosion protection into consideration.
3. Pay attention to the protection of persons.
4. Comply with national installation regulations and guidelines.
5. Observe cable specifications .
6. Keep the stripped and twisted lengths of cable shield to the ground terminal as short as possible.
7. Shield cables fully.

Grounding of the cable shield

NOTICE

In systems without potential matching, the multiple grounding of the cable shield causes mains frequency equalizing currents!

Damage to the bus cable shield.

- Only ground the bus cable shield to either the local ground or the protective ground at one end.
- Insulate the shield that is not connected.

To comply with EMC requirements:

1. Ensure the cable shield is grounded to the potential matching line at multiple points.
2. Connect every local ground terminal to the potential matching line.

6.2.5 Preparing the measuring device

NOTICE

Insufficient sealing of the housing!

Operational reliability of the measuring device could be compromised.

- Use suitable cable glands corresponding to the degree of protection.

1. Remove dummy plug if present.
2. If the measuring device is supplied without cable glands:
   Provide suitable cable gland for corresponding connecting cable.
3. If the measuring device is supplied with cable glands:
   Observe requirements for connecting cables → 33.

www.nicsanat.com
021-87700210
NIC SANAT
نیک صنعت

6.3 Connecting the measuring device

NOTICE

An incorrect connection compromises electrical safety!

- Have electrical connection work carried out by appropriately trained specialists only.
- Observe applicable federal/national installation codes and regulations.
- Comply with local workplace safety regulations.
- Always connect the protective ground cable ⏚ before connecting additional cables.
- When using in potentially explosive atmospheres, observe the information in the device-specific Ex documentation.

6.3.1 Connecting the transmitter

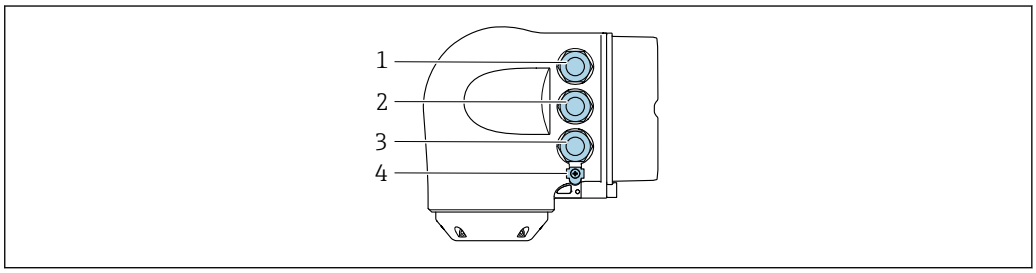

A0026781

1 *Terminal connection for supply voltage*
2 *Terminal connection for signal transmission, input/output*
3 *Terminal connection for signal transmission, input/output or terminal connection for network connection via service interface (CDI-RJ45); optional: connection for external WLAN antenna or remote display and operating module DKX001*
4 *Protective earth (PE)*

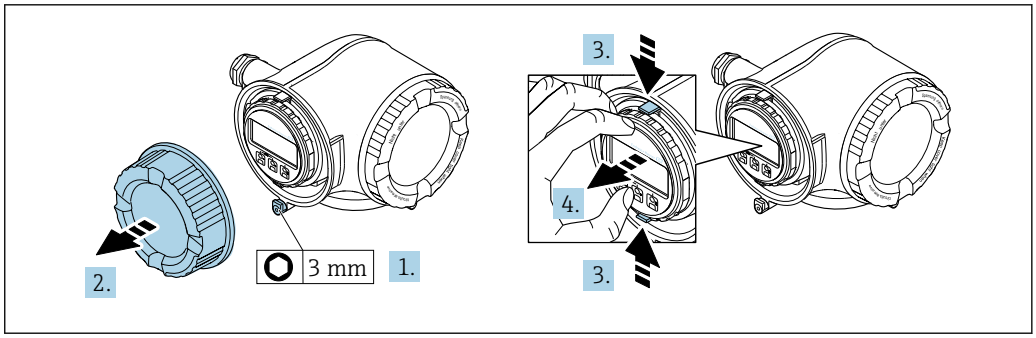

A0029813

1. Loosen the securing clamp of the connection compartment cover.
2. Unscrew the connection compartment cover.
3. Squeeze the tabs of the display module holder together.
4. Remove the display module holder.

www.nicsanat.com
021-87700210
NIC SANAT
نیک صنعت

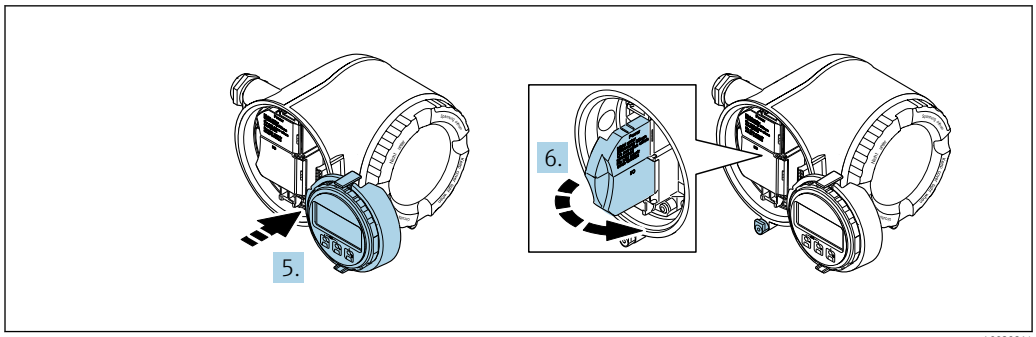

A0029814

5. Attach the holder to the edge of the electronics compartment.
6. Open the terminal cover.

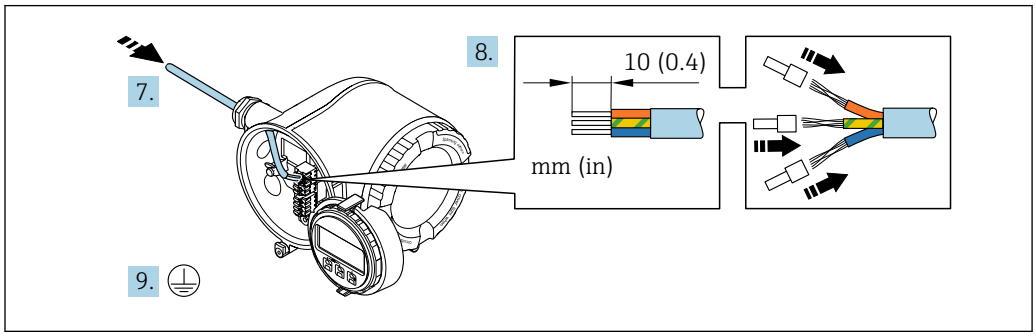

A0029815

7. Push the cable through the cable entry. To ensure tight sealing, do not remove the sealing ring from the cable entry.
8. Strip the cable and cable ends. In the case of stranded cables, also fit ferrules.
9. Connect the protective ground.

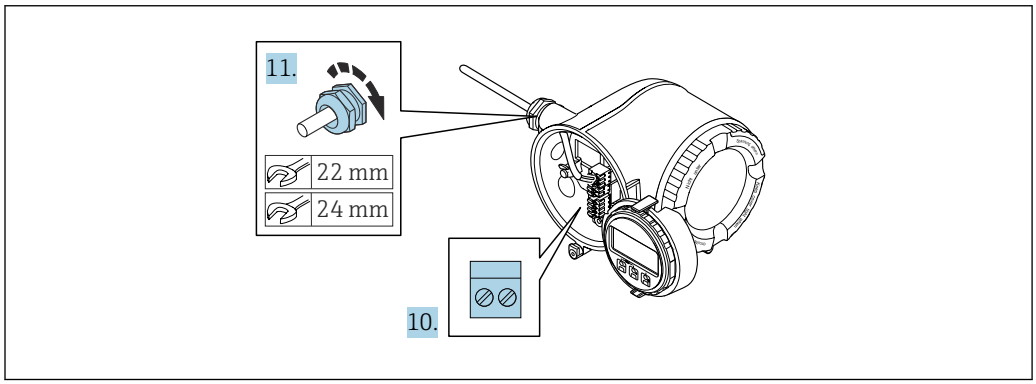

A0029816

10. Connect the cable according to the terminal assignment.
    ↳ **Signal cable terminal assignment:** The device-specific terminal assignment is documented on an adhesive label in the terminal cover.
    Supply voltage terminal assignment: Adhesive label in the terminal cover or → 36.
11. Firmly tighten the cable glands.
    ↳ This concludes the cable connection process.
12. Close the terminal cover.
13. Fit the display module holder in the electronics compartment.
14. Screw on the connection compartment cover.
15. Secure the securing clamp of the connection compartment cover.

www.nicsanat.com
021-87700210
NIC SANAT
نیک صنعت

Removing a cable

To remove a cable from the terminal:

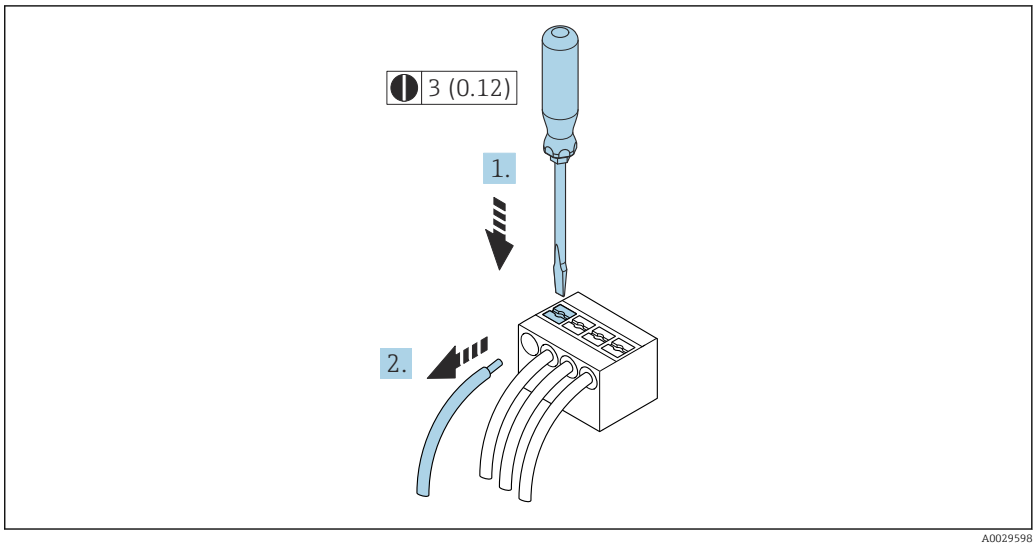

19 Engineering unit mm (in)

1. Use a flat-blade screwdriver to press down on the slot between the two terminal holes.
2. Remove the cable end from the terminal.

www.nicsanat.com
021-87700210
NIC SANAT
نیک صنعت

6.3.2 Connecting the remote display and operating module DKX001

The remote display and operating module DKX001 is available as an optional extra → 161.

- The measuring device is always supplied with a dummy cover when the remote display and operating module DKX001 is ordered directly with the measuring device. Display or operation at the transmitter is not possible in this case.
- If ordered subsequently, the remote display and operating module DKX001 may not be connected at the same time as the existing measuring device display module. Only one display or operation unit may be connected to the transmitter at any one time.

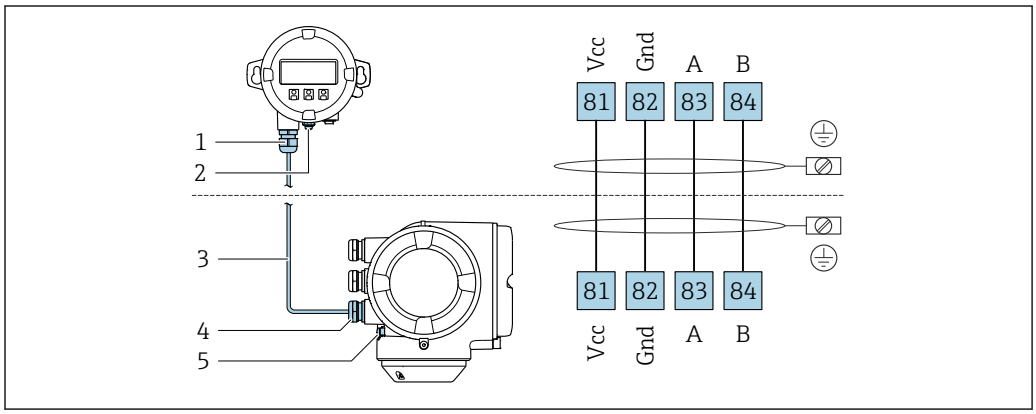

1 *Remote display and operating module DKX001*
2 *Terminal connection for potential equalization (PE)*
3 *Connecting cable*
4 *Measuring device*
5 *Terminal connection for potential equalization (PE)*

6.4 Potential equalization

6.4.1 Requirements

For potential equalization:
- Pay attention to in-house grounding concepts
- Take account of operating conditions like the pipe material and grounding
- Connect the medium, sensor and transmitter to the same electrical potential
- Use a ground cable with a minimum cross-section of 6 mm^2 (0.0093 in^2) and a cable lug for potential equalization connections

www.nicsanat.com 021-87700210 NIC SANAT نیک صنعت

6.5 Special connection instructions

6.5.1 Connection examples

Modbus RS485

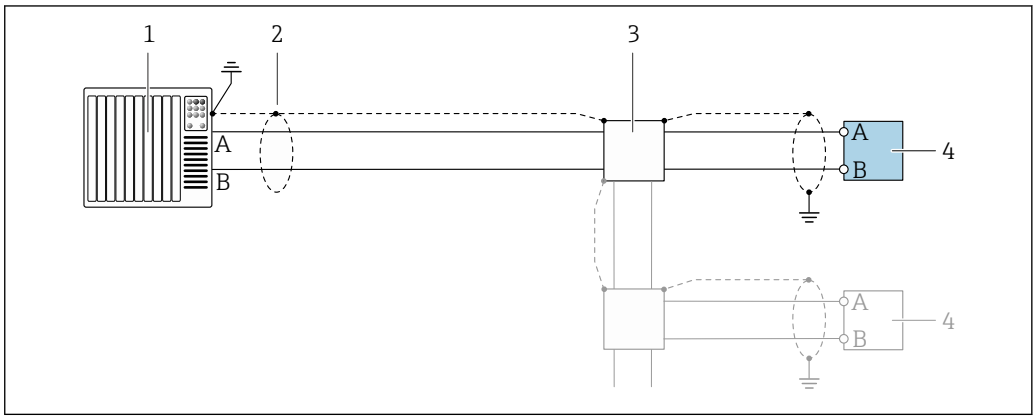

20 *Connection example for Modbus RS485, non-hazardous area and Zone 2; Class I, Division 2*

1 *Control system (e.g. PLC)*
2 *Cable shield provided at one end. The cable shield must be grounded at both ends to comply with EMC requirements; observe cable specifications*
3 *Distribution box*
4 *Transmitter*

Current output 4-20 mA

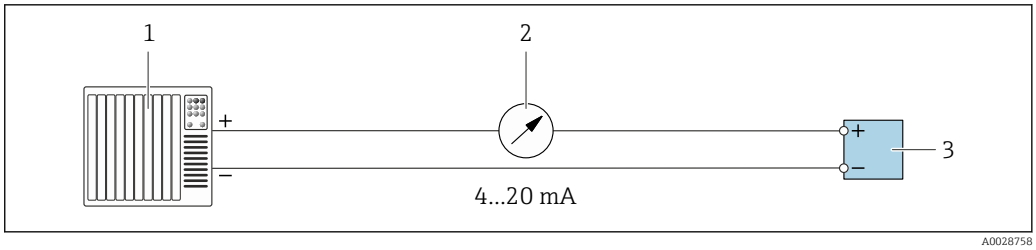

21 *Connection example for 4-20 mA current output (active)*

1 *Automation system with current input (e.g. PLC)*
2 *Analog display unit: observe maximum load*
3 *Transmitter*

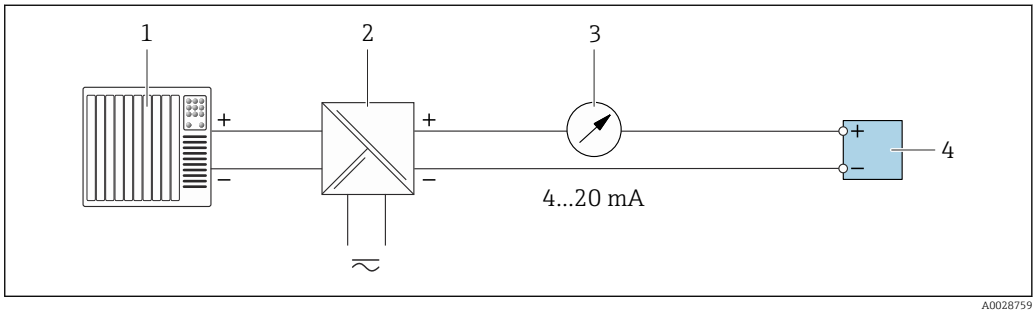

22 *Connection example for 4-20 mA current output (passive)*

1 *Automation system with current input (e.g. PLC)*
2 *Active barrier for power supply (e.g. RN221N)*
3 *Analog display unit: observe maximum load*
4 *Transmitter*

www.nicsanat.com
021-87700210
NIC SANAT
نیک صنعت

Pulse/frequency output

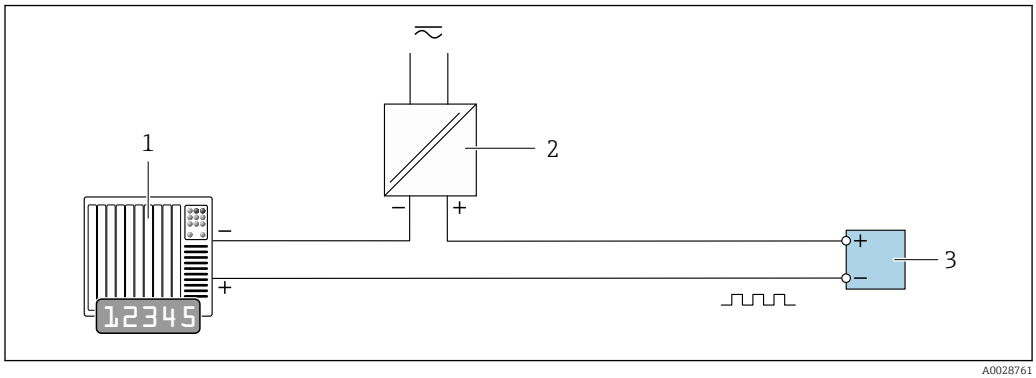

23 Connection example for pulse/frequency output (passive)

1 *Automation system with pulse/frequency input (e.g. PLC with 10 kΩ pull-up or pull-down resistor)*
2 *Power supply*
3 *Transmitter: observe input values → 171*

Switch output

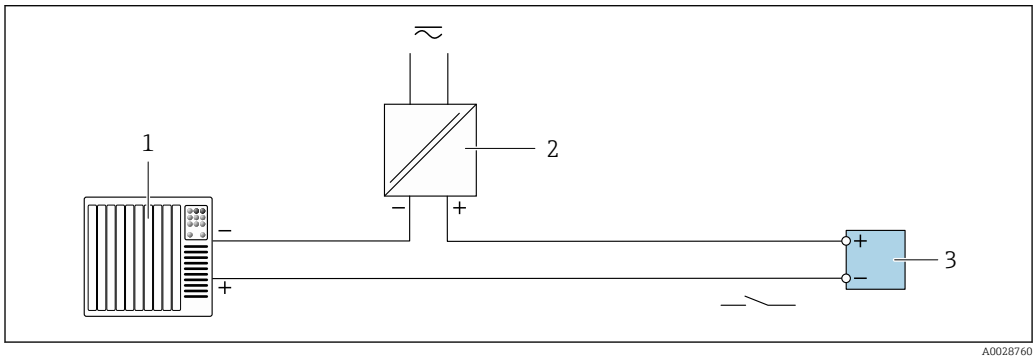

24 Connection example for switch output (passive)

1 *Automation system with switch input (e.g. PLC with a 10 kΩ pull-up or pull-down resistor)*
2 *Power supply*
3 *Transmitter: observe input values → 171*

Relay output

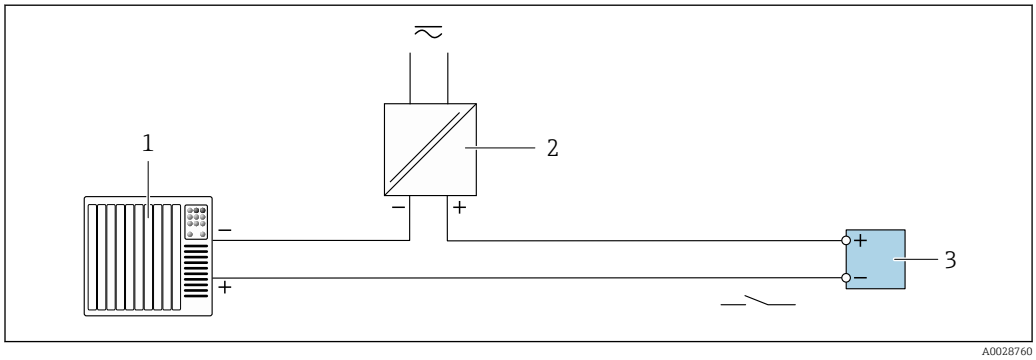

25 Connection example for relay output (passive)

1 *Automation system with relay input (e.g. PLC)*
2 *Power supply*
3 *Transmitter: observe input values → 173*

www.nicsanat.com
021-87700210
NIC SANAT
نیک صنعت

Current input

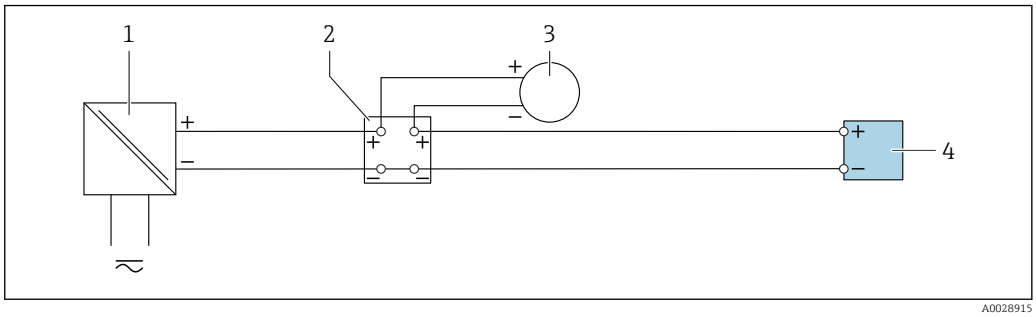

26 *Connection example for 4 to 20 mA current input*

1 *Power supply*
2 *Terminal box*
3 *External measuring device (to read in pressure or temperature, for instance)*
4 *Transmitter*

Status input

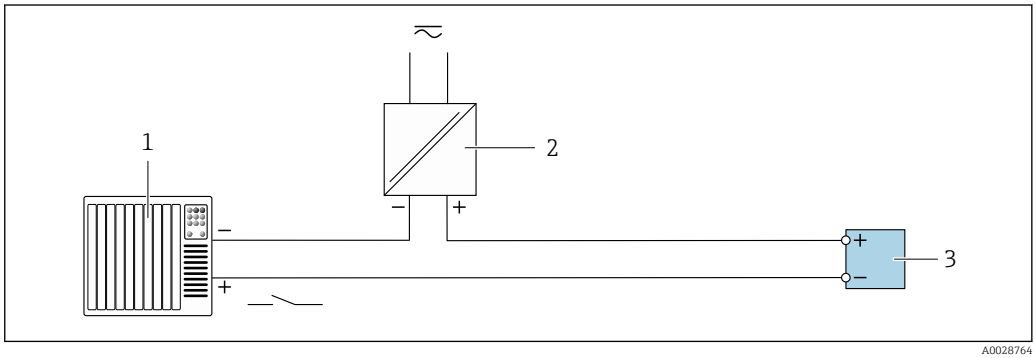

27 *Connection example for status input*

1 *Automation system with status output (e.g. PLC)*
2 *Power supply*
3 *Transmitter*

6.6 Hardware settings

6.6.1 Setting the device address

The device address must always be configured for a Modbus slave. The valid device addresses are in the range from 1 to 247. Each address may only be assigned once in a Modbus RS485 network. If an address is not configured correctly, the measuring device is not recognized by the Modbus master. All measuring devices are delivered from the factory with the device address 247 and with the "software addressing" address mode.

www.nicsanat.com
021-87700210
NIC SANAT
نیک صنعت

Hardware addressing

1.

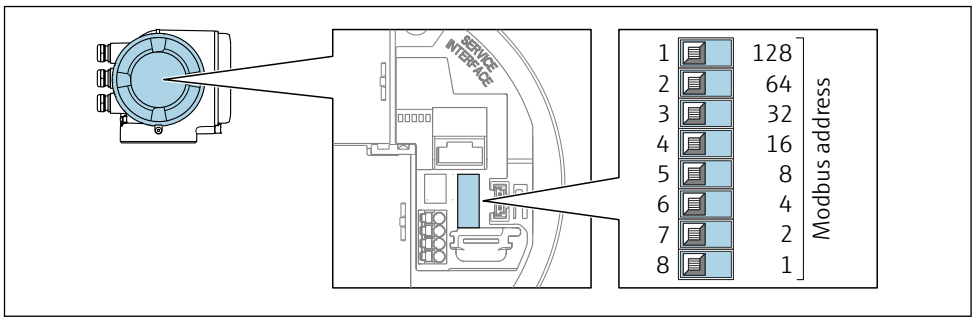

A0029634

Set the desired device address using the DIP switches in the connection compartment.

2.

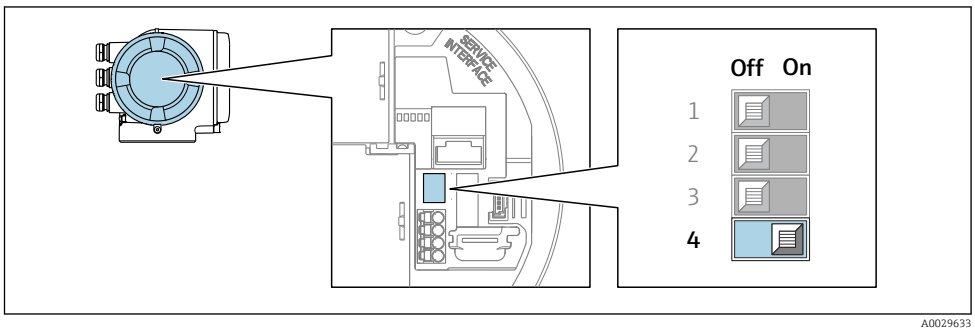

A0029633

To switch addressing from software addressing to hardware addressing: set the DIP switch to **On**.

↳ The change of device address takes effect after 10 seconds.

Software addressing

- To switch addressing from hardware addressing to software addressing: set the DIP switch to **Off**.
  - ↳ The device address configured in the **Device address** parameter takes effect after 10 seconds.

6.6.2 Activating the terminating resistor

To avoid incorrect communication transmission caused by impedance mismatch, terminate the Modbus RS485 cable correctly at the start and end of the bus segment.

- 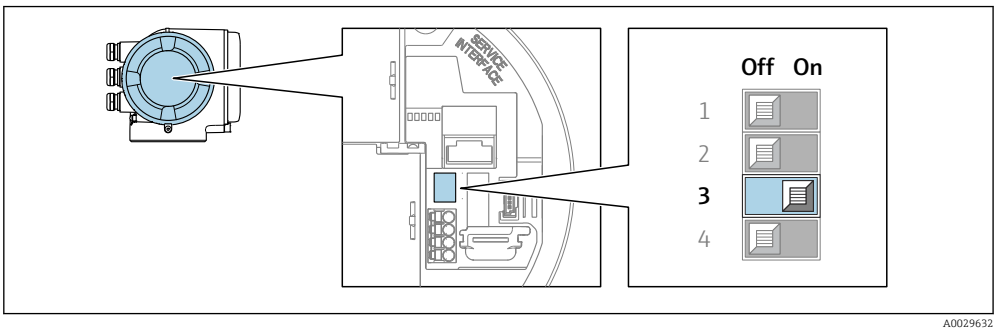

A0029632

Switch DIP switch no. 3 to **On**.

6.7 Ensuring the degree of protection

The measuring device fulfills all the requirements for the degree of protection IP66/67, Type 4X enclosure.

www.nicsanat.com
021-87700210
NIC SANAT
نیک صنعت

To guarantee the degree of protection IP66/67, Type 4X enclosure, carry out the following steps after electrical connection:

1. Check that the housing seals are clean and fitted correctly.
2. Dry, clean or replace the seals if necessary.
3. Tighten all housing screws and screw covers.
4. Firmly tighten the cable glands.
5. To ensure that moisture does not enter the cable entry:
   Route the cable so that it loops down before the cable entry ("water trap").
   ↳
   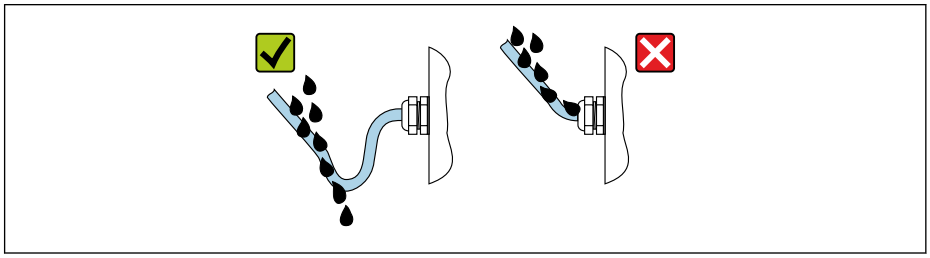
   A0029278
6. The cable glands supplied do not ensure housing protection when not in use. They must therefore be replaced by dummy plus corresponding to the housing protection.

6.8 Post-connection check

Are cables or the device undamaged (visual inspection)?	❑
Is the protective earthing established correctly?	
Do the cables used comply with the requirements ?	❑
Do the mounted cables have adequate strain relief?	❑
Are all cable glands installed, securely tightened and leak-tight? Cable run with "water trap" → 🗎 44?	❑
Is the terminal assignment correct ?	❑
If supply voltage is present, do values appear on the display module?	❑
Are dummy plugs inserted in unused cable entries and have transportation plugs been replaced with dummy plugs?	

www.nicsanat.com 021-87700210 NIC SANAT نیک صنعت

7 Operation options

7.1 Overview of operation options

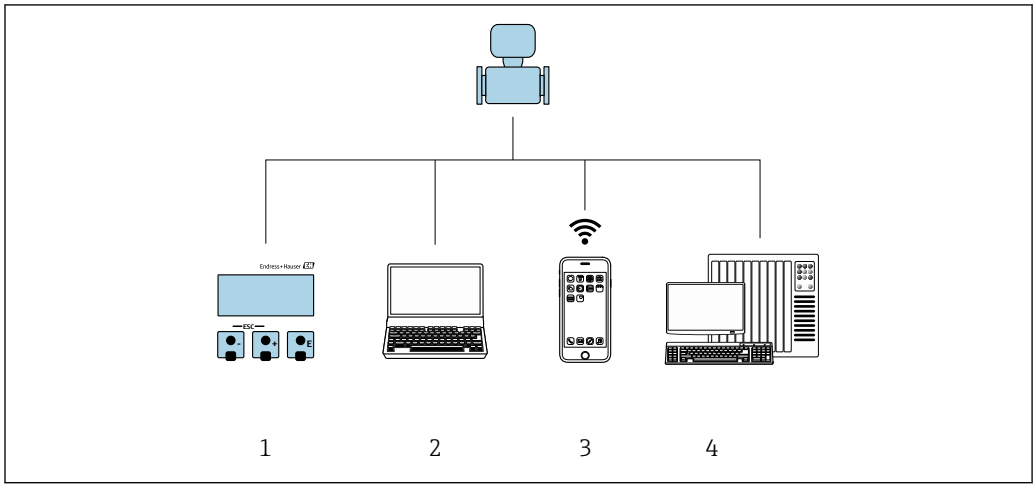

A0030213

1 *Local operation via display module*
2 *Computer with Web browser (e.g. Internet Explorer) or with operating tool (e.g. FieldCare, DeviceCare, AMS Device Manager, SIMATIC PDM)*
3 *Mobile handheld terminal with SmartBlue App*
4 *Control system (e.g. PLC)*

www.nicsanat.com
021-87700210
NIC SANAT
نیک صنعت

7.2 Structure and function of the operating menu

7.2.1 Structure of the operating menu

For an overview of the operating menu for experts: see the "Description of Device Parameters" document supplied with the device

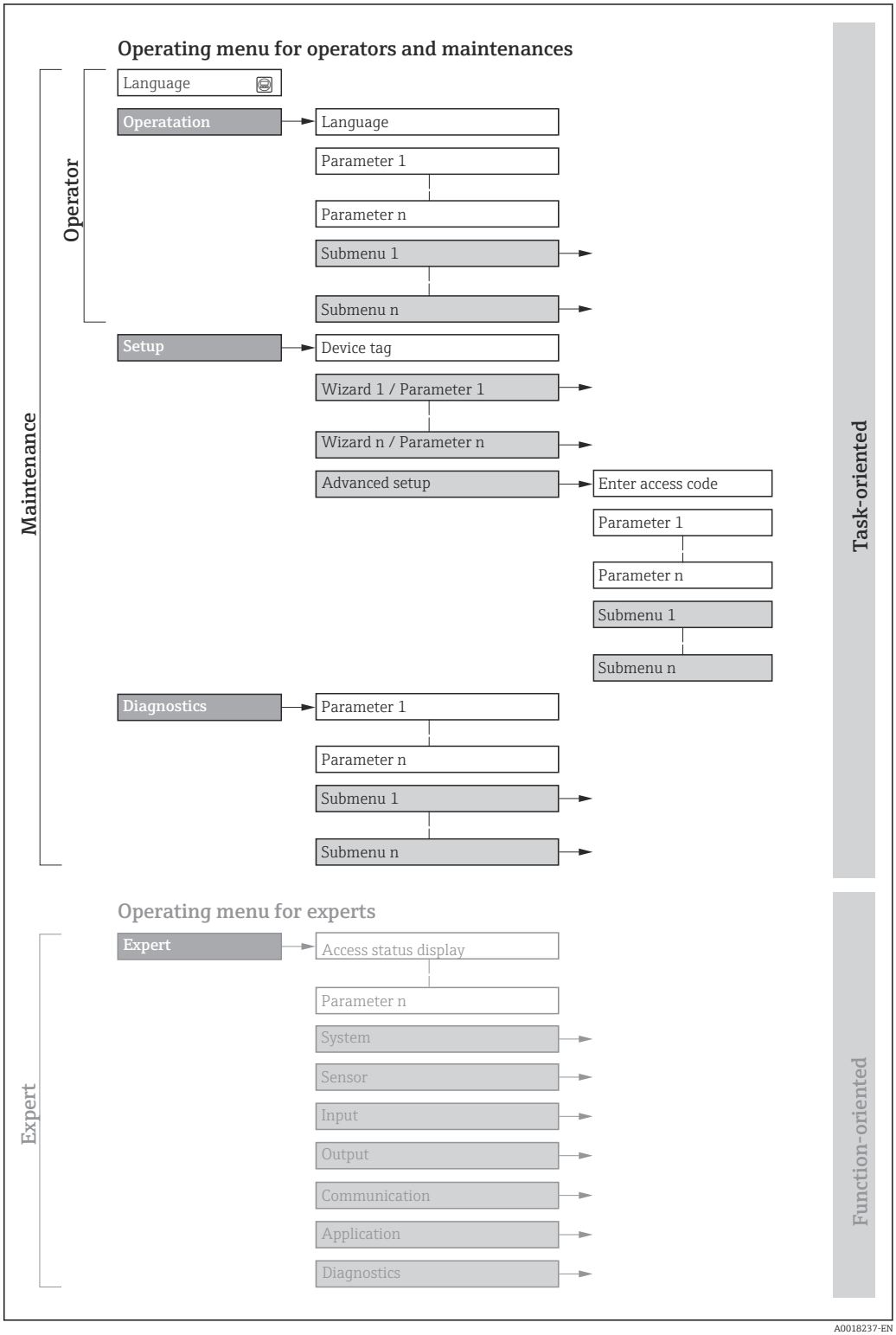

28 *Schematic structure of the operating menu*

www.nicsanat.com
021-87700210
NIC SANAT
نیک صنعت

7.2.2 Operating philosophy

The individual parts of the operating menu are assigned to certain user roles (e.g. operator, maintenance etc.). Each user role contains typical tasks within the device life cycle.

Menu/parameter		User role and tasks	Content/meaning
Language	Task-oriented	**Role "Operator", "Maintenance"** Tasks during operation: ▪ Configuration of the operational display ▪ Read measured values	▪ Define the operating language ▪ Define the web server operating language ▪ Reset and control totalizers
Operation			▪ Configuration of the operational display (e.g. display format, display contrast) ▪ Reset and control totalizers
Setup		**"Maintenance" role** Commissioning: ▪ Configuration of the measurement ▪ Configuration of the inputs and outputs ▪ Configuration of the communication interface	Wizards for fast commissioning: ▪ Configure the system units ▪ Display the I/O configuration ▪ Configure the inputs ▪ Configure the outputs ▪ Configuration of the operational display ▪ Configure the low flow cut off Advanced setup ▪ For more customized configuration of the measurement (adaptation to special measuring conditions) ▪ Configuration of totalizers ▪ Configuration of WLAN settings ▪ Administration (define access code, reset measuring device)
Diagnostics		**"Maintenance" role** Troubleshooting: ▪ Diagnostics and elimination of process and device errors ▪ Measured value simulation	Contains all parameters for error detection and analyzing process and device errors: ▪ Diagnostic list Contains up to 5 currently pending diagnostic messages. ▪ Event logbook Contains event messages that have occurred. ▪ Device information Contains information for identifying the device. ▪ Measured values Contains all current measured values. ▪ **Data logging** submenu with the "Extended HistoROM" order option Storage and visualization of measured values ▪ Heartbeat Technology The functionality of the device is checked on demand and the verification results are documented. ▪ Simulation Is used to simulate measured values or output values.
Expert	Function-oriented	Tasks that require detailed knowledge of the operating principle of the device: ▪ Commissioning measurements under difficult conditions ▪ Optimal adaptation of the measurement to difficult conditions ▪ Detailed configuration of the communication interface ▪ Error diagnostics in difficult cases	Contains all the parameters of the device and makes it possible to access these parameters directly using an access code. The structure of this menu is based on the function blocks of the device: ▪ System Contains all higher-level device parameters that do not pertain either to the measurement or to measured value communication. ▪ Sensor Configuration of the measurement. ▪ Input Configuration of the status input. ▪ Output Configuration of the analog current outputs as well as the pulse/frequency and switch output. ▪ Communication Configuration of the digital communication interface and the web server. ▪ Application Configuration of the functions that go beyond the actual measurement (e.g. totalizer). ▪ Diagnostics Error detection and analysis of process and device errors and for device simulation and Heartbeat Technology.

www.nicsanat.com 021-87700210 NIC SANAT نیک صنعت

7.3 Access to operating menu via local display

7.3.1 Operational display

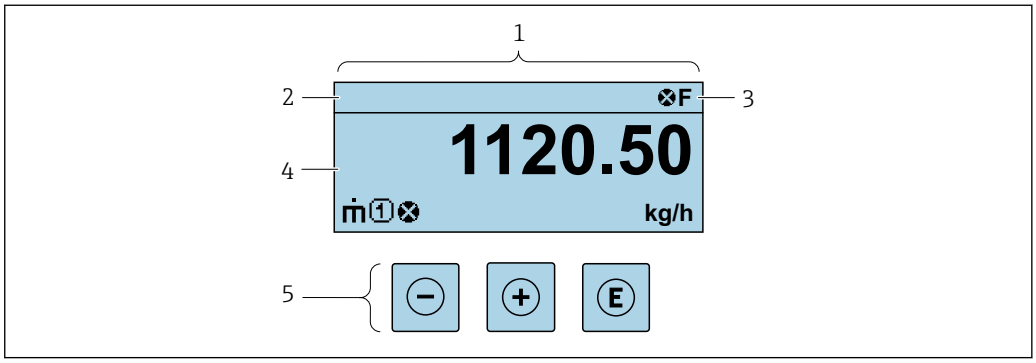

1 *Operational display*
2 *Device tag*
3 *Status area*
4 *Display area for measured values (up to 4 lines)*
5 *Operating elements* → 📄 *55*

Status area

The following symbols appear in the status area of the operational display at the top right:
- Status signals→ 📄 142
  - **F**: Failure
  - **C**: Function check
  - **S**: Out of specification
  - **M**: Maintenance required
- Diagnostic behavior→ 📄 143
  - ⊗: Alarm
  - ⚠: Warning
- 🔒: Locking (the device is locked via the hardware)
- ⇆: Communication (communication via remote operation is active)

Display area

In the display area, each measured value is prefaced by certain symbol types for further description:

	Measured variable	Measurement channel number	Diagnostic behavior
	↓	↓	↓
Example		1	⚠
			Appears only if a diagnostics event is present for this measured variable.

Measured variables

Symbol	Meaning
ṁ	Mass flow
U̇	▪ Volume flow ▪ Corrected volume flow ▪ FAD volume flow

www.nicsanat.com
021-87700210
NIC SANAT
نیک صنعت

$\dot{Q}$	Heat flow
ρ	▪ Density ▪ Reference density
P	Energy flow
	Flow velocity
H	Calorific value
	Temperature

The number and display format of the measured variables can be configured via the **Format display** parameter (→ 103).

Totalizer

Symbol	Meaning
Σ	Totalizer The measurement channel number indicates which of the three totalizers is displayed.

Output

Symbol	Meaning
	Output The measurement channel number indicates which of the outputs is displayed.

Input

Symbol	Meaning
	Status input

Measurement channel numbers

Symbol	Meaning
1 ... 4	Measurement channel 1 to 4 The measurement channel number is only displayed if more than one channel is present for the same measured variable type (e.g. Totalizer 1 to 3).

Diagnostic behavior

Symbol	Meaning
	Alarm ▪ Measurement is interrupted. ▪ Signal outputs and totalizers assume the defined alarm condition. ▪ A diagnostic message is generated.
	Warning ▪ Measurement is resumed. ▪ The signal outputs and totalizers are not affected. ▪ A diagnostic message is generated.

The diagnostic behavior pertains to a diagnostic event that is relevant to the displayed measured variable.

www.nicsanat.com
021-87700210
NIC SANAT
نیک صنعت

7.3.2 Navigation view

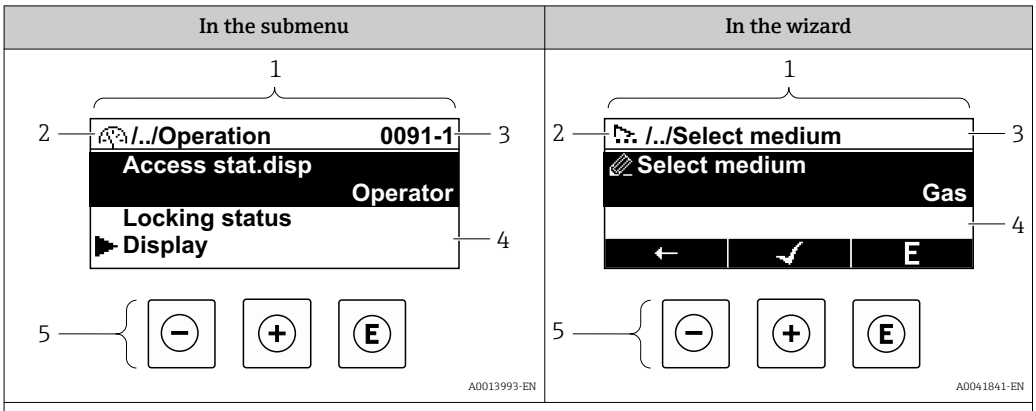

1 *Navigation view*
2 *Navigation path to current position*
3 *Status area*
4 *Display area for navigation*
5 *Operating elements* → 📄 55

Navigation path

The navigation path to the current position is displayed at the top left in the navigation view and consists of the following elements:
- The display symbol for the menu/submenu (🕘) or the wizard (🧙).
- An omission symbol (/ ../) for operating menu levels in between.
- Name of the current submenu, wizard or parameter

	Display symbol	Omission symbol	Parameter
	↓	↓	↓
Example	🕘	/ ../	Display

For more information about the icons in the menu, refer to the "Display area" section → 📄 51

Status area

The following appears in the status area of the navigation view in the top right corner:
- In the submenu
  - The direct access code to the parameter (e.g., 0022-1)
  - If a diagnostic event is present, the diagnostic behavior and status signal
- In the wizard
  If a diagnostic event is present, the diagnostic behavior and status signal

- For information on the diagnostic behavior and status signal → 📄 142
- For information on the function and entry of the direct access code → 📄 57

Display area

Menus

Symbol	Meaning
🕘	**Operation** Appears: ▪ In the menu next to the "Operation" selection ▪ At the left in the navigation path in the **Operation** menu

www.nicsanat.com 021-87700210 NIC SANAT نیک صنعت

	Setup Appears: ▪ In the menu next to the "Setup" selection ▪ At the left in the navigation path in the **Setup** menu
	Diagnostics Appears: ▪ In the menu next to the "Diagnostics" selection ▪ At the left in the navigation path in the **Diagnostics** menu
	Expert Appears: ▪ In the menu next to the "Expert" selection ▪ At the left in the navigation path in the **Expert** menu

Submenus, wizards, parameters

Symbol	Meaning
	Submenu
	Wizard
	Parameters within a wizard No display symbol exists for parameters in submenus.

Locking

Symbol	Meaning
	Parameter locked When displayed in front of a parameter name, indicates that the parameter is locked. ▪ By a user-specific access code ▪ By the hardware write protection switch

Wizard operation

Symbol	Meaning
	Switches to the previous parameter.
	Confirms the parameter value and switches to the next parameter.
E	Opens the editing view of the parameter.

www.nicsanat.com
021-87700210
NIC SANAT
نیک صنعت

7.3.3 Editing view

Numeric editor

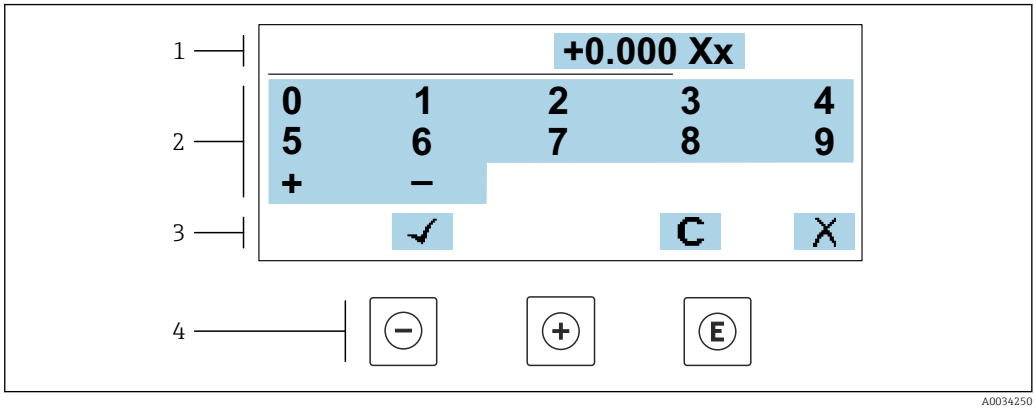

29 *For entering values in parameters (e.g. limit values)*

1 *Entry display area*
2 *Input screen*
3 *Confirm, delete or reject entry*
4 *Operating elements*

Text editor

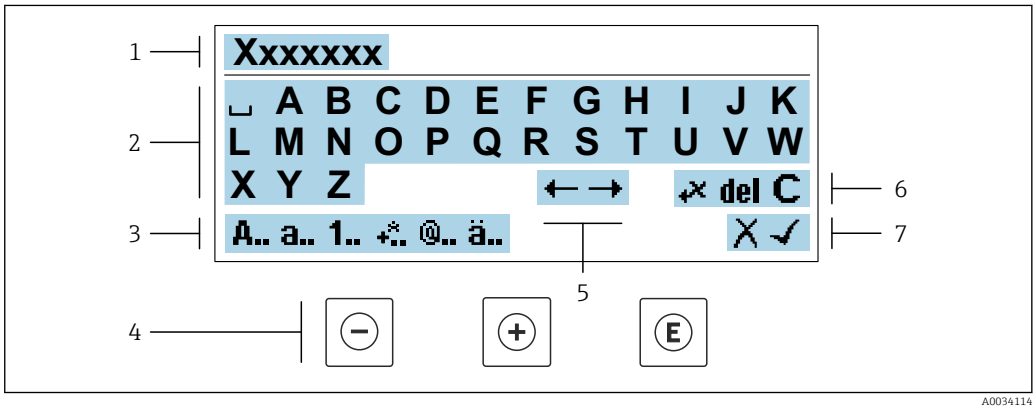

30 *For entering text in parameters (e.g. device tag)*

1 *Entry display area*
2 *Current input screen*
3 *Change input screen*
4 *Operating elements*
5 *Move entry position*
6 *Delete entry*
7 *Reject or confirm entry*

Using the operating elements in the editing view

Operating key	Meaning
⊖	**Minus key** Move the entry position to the left.
⊕	**Plus key** Move the entry position to the right.

www.nicsanat.com
021-87700210
NIC SANAT
نیک صنعت

Operating key	Meaning
E	**Enter key** ▪ Pressing the key briefly confirms your selection. ▪ Pressing the key for 2 s confirms your entry.
− +	**Escape key combination (press keys simultaneously)** Close the editing view without accepting a change.

Input screens

Symbol	Meaning
A..	Upper case
a..	Lower case
1..	Numbers
+..	Punctuation marks and special characters: = + − * / ² ³ ¼ ½ ¾ ( ) [ ] < > { }
@..	Punctuation marks and special characters: ' " ` ^ . , ; : ? ! % µ ° € $ £ ¥ § @ # / \ I ~ & _
ä..	Umlauts and accents

Controlling data entries

Symbol	Meaning
←→	Move entry position
✗	Reject entry
✓	Confirm entry
←✗	Delete character immediately to the left of the entry position
del	Delete character immediately to the right of the entry position
C	Clear all the characters entered

www.nicsanat.com 021-87700210 NIC SANAT نیک صنعت

7.3.4 Operating elements

Operating key	Meaning
⊖	**Minus key** *In menu, submenu* Moves the selection bar upwards in a picklist. *With a wizard* Confirms the parameter value and goes to the previous parameter. *In the text and numeric editor* Move the entry position to the left.
⊕	**Plus key** *In menu, submenu* Moves the selection bar downwards in a picklist. *With a wizard* Confirms the parameter value and goes to the next parameter. *In the text and numeric editor* Move the entry position to the right.

E	**Enter key**
	With an operational display
	Pressing the key briefly opens the operating menu.
	In menu, submenu
	▪ Pressing the key briefly:
	  ▪ Opens the selected menu, submenu or parameter.
	  ▪ Starts the wizard.
	  ▪ If help text is open, closes the help text of the parameter.
	▪ Pressing the key for 2 s for parameter:
	  If present, opens the help text for the function of the parameter.
	With a Wizard
	Opens the editing view of the parameter.
	In the text and numeric editor
	▪ Pressing the key briefly confirms your selection.
	▪ Pressing the key for 2 s confirms your entry.

⊖ + ⊕	**Escape key combination (press keys simultaneously)**
	In menu, submenu
	▪ Pressing the key briefly:
	  ▪ Exits the current menu level and takes you to the next higher level.
	  ▪ If help text is open, closes the help text of the parameter.
	▪ Pressing the key for 2 s returns you to the operational display ("home position").
	With a wizard
	Exits the wizard and takes you to the next higher level.
	In the text and numeric editor
	Exits the Editing view without applying the changes.

⊖ + E	**Minus/Enter key combination (press and hold down the keys simultaneously)**
	▪ If keypad lock is active:
	  Pressing the key for 3 s deactivates the keypad lock.
	▪ If keypad lock is not active:
	  Pressing the key for 3 s opens the context menu including the option for activating the keypad lock.

7.3.5 Opening the context menu

Using the context menu, the user can call up the following menus quickly and directly from the operational display:

- Setup
- Data backup
- Simulation

www.nicsanat.com
021-87700210
NIC SANAT
نیک صنعت

Calling up and closing the context menu

The user is in the operational display.

1. Press the ⊟ and Ⓔ keys for longer than 3 seconds.
   ↳ The context menu opens.

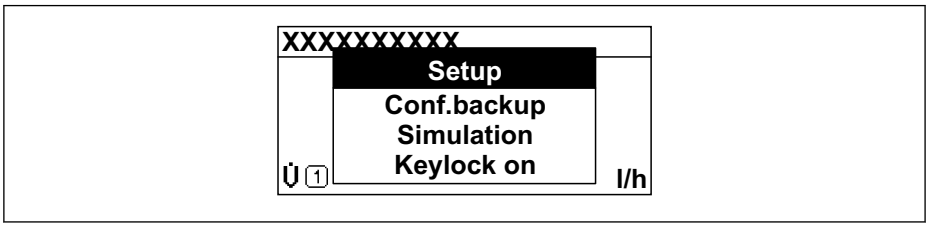

2. Press ⊟ + ⊞ simultaneously.
   ↳ The context menu is closed and the operational display appears.

Calling up the menu via the context menu

1. Open the context menu.
2. Press ⊞ to navigate to the desired menu.
3. Press Ⓔ to confirm the selection.
   ↳ The selected menu opens.

www.nicsanat.com 021-87700210 NIC SANAT نیک صنعت

7.3.6 Navigating and selecting from list

Different operating elements are used to navigate through the operating menu. The navigation path is displayed on the left in the header. Icons are displayed in front of the individual menus. These icons are also shown in the header during navigation.

For an explanation of the navigation view with symbols and operating elements → 51

Example: Setting the number of displayed measured values to "2 values"

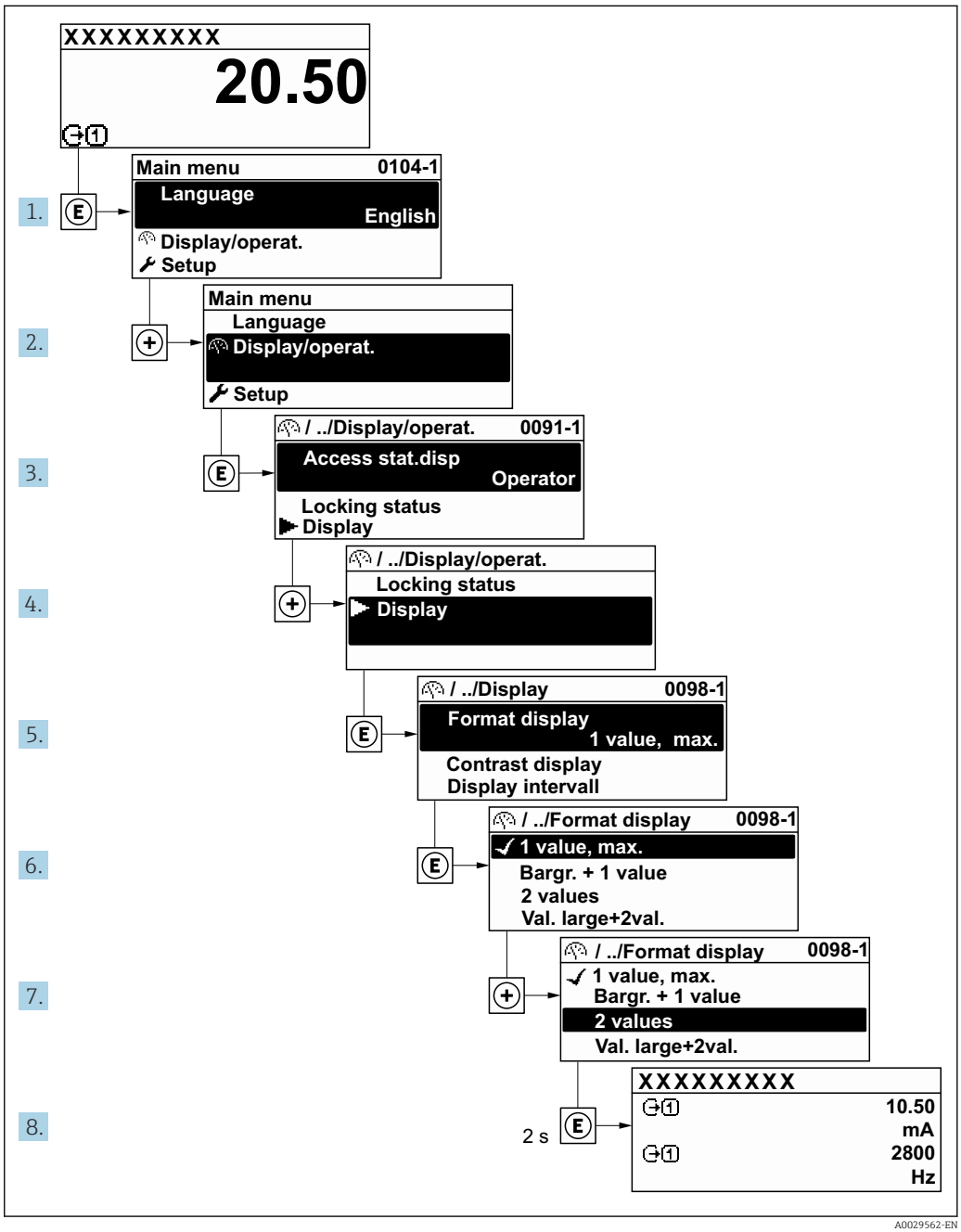

7.3.7 Calling the parameter directly

A parameter number is assigned to every parameter to be able to access a parameter directly via the onsite display. Entering this access code in the **Direct access** parameter calls up the desired parameter directly.

Navigation path

Expert → Direct access

www.nicsanat.com
021-87700210
NIC SANAT

The direct access code consists of a 5-digit number (at maximum) and the channel number, which identifies the channel of a process variable: e.g. 00914-2. In the navigation view, this appears on the right-hand side in the header of the selected parameter.

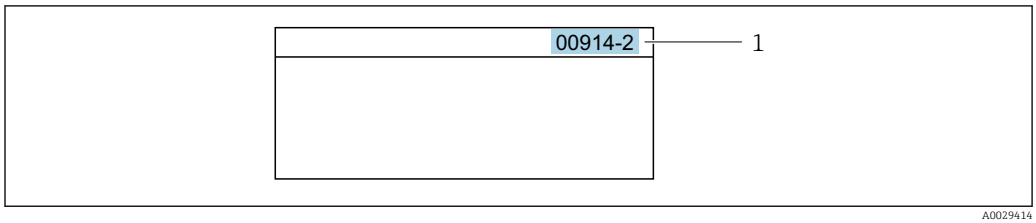

1 Direct access code

Note the following when entering the direct access code:
- The leading zeros in the direct access code do not have to be entered.
  Example: Enter **"914"** instead of **"00914"**
- If no channel number is entered, channel 1 is opened automatically.
  Example: Enter **00914** → **Assign process variable** parameter
- If a different channel is opened: Enter the direct access code with the corresponding channel number.
  Example: Enter **00914-2** → **Assign process variable** parameter

For the direct access codes of the individual parameters, see the "Description of Device Parameters" document for the device

7.3.8 Calling up help text

Help text is available for some parameters and can be called up from the navigation view. The help text provides a brief explanation of the parameter function and thereby supports swift and safe commissioning.

Calling up and closing the help text

The user is in the navigation view and the selection bar is on a parameter.

1. Press E for 2 s.
   ↳ The help text for the selected parameter opens.

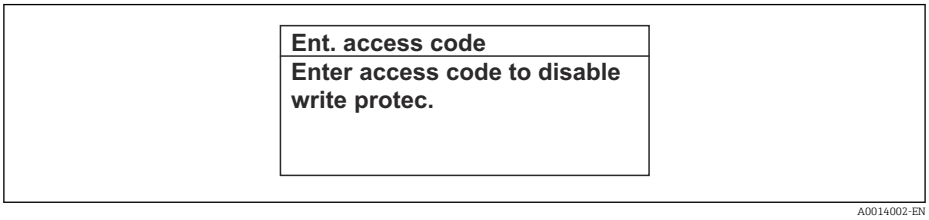

31 Example: Help text for parameter "Enter access code"

2. Press − + + simultaneously.
   ↳ The help text is closed.

7.3.9 Changing the parameters

Parameters can be changed via the numeric editor or text editor.
- Numeric editor: Change values in a parameter, e.g. specifications for limit values.
- Text editor: Enter text in a parameter, e.g. tag name.

A message is displayed if the value entered is outside the permitted value range.

www.nicsanat.com 021-87700210 NIC SANAT نیک صنعت

Ent. access code
Invalid or out of range input value Min:0 Max:9999

A0014049-EN

For a description of the editing view - consisting of the text editor and numeric editor - with symbols → 53, for a description of the operating elements → 55

7.3.10 User roles and related access authorization

The two user roles "Operator" and "Maintenance" have different write access to the parameters if the customer defines a user-specific access code. This protects the device configuration via the local display from unauthorized access → 125.

Defining access authorization for user roles

An access code is not yet defined when the device is delivered from the factory. Access authorization (read and write access) to the device is not restricted and corresponds to the "Maintenance" user role.

- Define the access code.
  - The "Operator" user role is redefined in addition to the "Maintenance" user role. Access authorization differs for the two user roles.

Access authorization to parameters: "Maintenance" user role

Access code status	Read access	Write access
An access code has not yet been defined (factory setting).	✔	✔
After an access code has been defined.	✔	✔ [1]

1) The user only has write access after entering the access code.

Access authorization to parameters: "Operator" user role

Access code status	Read access	Write access
After an access code has been defined.	✔	– [1]

1) Despite the defined access code, certain parameters can always be modified and thus are excluded from the write protection as they do not affect the measurement: write protection via access code → 125

The user role with which the user is currently logged on is indicated by the **Access status** parameter. Navigation path: Operation → Access status

7.3.11 Disabling write protection via access code

If the 🔒-symbol appears on the local display in front of a parameter, the parameter is write-protected by a user-specific access code and its value cannot be changed at the moment using local operation → 125.

Parameter write protection via local operation can be disabled by entering the user-specific access code in the **Enter access code** parameter (→ 106) via the respective access option.

1. After you press E, the input prompt for the access code appears.

www.nicsanat.com
021-87700210
NIC SANAT
نیک صنعت

2. Enter the access code.
   ↳ The 🔒-symbol in front of the parameters disappears; all previously write-protected parameters are now re-enabled.

7.3.12 Enabling and disabling the keypad lock

The keypad lock makes it possible to block access to the entire operating menu via local operation. As a result, it is no longer possible to navigate through the operating menu or change the values of individual parameters. Users can only read the measured values on the operational display.

The keypad lock is switched on and off via the context menu.

Switching on the keypad lock

The keypad lock is switched on automatically:
- If the device has not been operated via the display for > 1 minute.
- Each time the device is restarted.

To activate the keylock manually:

1. The device is in the measured value display.
   Press the ⊟ and Ⓔ keys for 3 seconds.
   ↳ A context menu appears.
2. In the context menu select the **Keylock on** option.
   ↳ The keypad lock is switched on.

If the user attempts to access the operating menu while the keypad lock is active, the **Keylock on** message appears.

Switching off the keypad lock

▶ The keypad lock is switched on.
Press the ⊟ and Ⓔ keys for 3 seconds.
↳ The keypad lock is switched off.

7.4 Access to operating menu via web browser

7.4.1 Function range

With the integrated web server, the device can be operated and configured via a web browser service interface (CDI-RJ45) or WLAN interface. The structure of the operating menu is the same as for the local display. In addition to the measured values, status information on the device is displayed and can be used to monitor device health. Furthermore the device data can be managed and the network parameters can be configured.

A device that has a WLAN interface (can be ordered as an option) is required for the WLAN connection: order code for "Display; operation", option G "4-line, illuminated; touch control + WLAN". The device acts as an Access Point and enables communication by computer or a mobile handheld terminal.

For additional information on the web server, refer to the Special Documentation for the device → 📄 196(Verweisziel existiert nicht, aber @y.link.required='true')

www.nicsanat.com 021-87700210 NIC SANAT نیک صنعت

7.4.2 Requirements

Computer hardware

Hardware	Interface	
	CDI-RJ45	WLAN
Interface	The computer must have a RJ45 interface. [1]	The operating unit must have a WLAN interface.
Connection	Standard Ethernet cable	Connection via Wireless LAN.
Screen	Recommended size: ≥12" (depends on the screen resolution)	

1) Recommended cable: CAT5e, CAT6 or CAT7, with shielded plug (e.g. YAMAICHI product; part no. Y-ConProfixPlug63/Prod. ID: 82-006660)

Computer software

Software	Interface	
	CDI-RJ45	WLAN

Recommended operating systems	▪ Microsoft Windows 8 or higher.
	▪ Mobile operating systems:
	  ▪ iOS
	  ▪ Android
	ℹ Microsoft Windows XP and Windows 7 is supported.	

Web browsers supported	▪ Microsoft Internet Explorer 8 or higher ▪ Microsoft Edge ▪ Mozilla Firefox ▪ Google Chrome ▪ Safari	

Computer settings

Settings	Interface	
	CDI-RJ45	WLAN
User rights	Appropriate user rights (e.g. administrator rights) for TCP/IP and proxy server settings are necessary (e.g. for adjusting the IP address, subnet mask etc.).	
Proxy server settings of the web browser	The web browser's *Use a Proxy Server for Your LAN* setting must be **deselected** .	
JavaScript	JavaScript must be enabled. ℹ If JavaScript cannot be enabled: Enter http://192.168.1.212/servlet/basic.html in the address bar of the web browser. A fully functional but simplified version of the operating menu structure starts in the web browser. ℹ When installing a new firmware version: To enable correct data display, clear the temporary memory (cache) under **Internet options** in the web browser.	
Network connections	Use only the active network connections for the measuring device.	
	Switch off all other network connections such as WLAN for example.	Switch off all other network connections.

ℹ In the event of connection problems: → 📄 140

www.nicsanat.com
021-87700210
NIC SANAT
نیک صنعت

Measuring device: Via CDI-RJ45 service interface

Device	CDI-RJ45 service interface
Measuring device	The measuring device has an RJ45 interface.
Web server	Web server must be enabled; factory setting: ON For information on enabling the Web server → 66

Measuring device: via WLAN interface

Device	WLAN interface
Measuring device	The measuring device has a WLAN antenna: ▪ Transmitter with integrated WLAN antenna ▪ Transmitter with external WLAN antenna
Web server	Web server and WLAN must be enabled; factory setting: ON For information on enabling the Web server → 66

7.4.3 Establishing a connection

Via service interface (CDI-RJ45)

Preparing the measuring device

1. Depending on the housing version:
   Loosen the securing clamp or fixing screw of the housing cover.
2. Depending on the housing version:
   Unscrew or open the housing cover.
3. Connect the computer to the RJ45 plug via the standard Ethernet cable .

Configuring the Internet protocol of the computer

The following information refers to the default Ethernet settings of the device.

IP address of the device: 192.168.1.212 (factory setting)

1. Switch on the measuring device.
2. Connect the computer to the RJ45 plug via the standard Ethernet cable → 67.
3. If a 2nd network card is not used, close all the applications on the notebook.
   ↳ Applications requiring Internet or a network, such as e-mail, SAP applications, Internet or Windows Explorer.
4. Close any open Internet browsers.
5. Configure the properties of the Internet protocol (TCP/IP) as defined in the table:

IP address	192.168.1.XXX; for XXX all numerical sequences except: 0, 212 and 255 → e.g. 192.168.1.213
Subnet mask	255.255.255.0
Default gateway	192.168.1.212 or leave cells empty

Via WLAN interface

Configuring the Internet protocol of the mobile terminal

NOTICE

If the WLAN connection is lost during the configuration, settings made may be lost.

▶ Make sure that the WLAN connection is not disconnected while configuring the device.

www.nicsanat.com 021-87700210 NIC SANAT نیک صنعت

NOTICE

Note the following to avoid a network conflict:

- Avoid accessing the measuring device simultaneously from the same mobile terminal via the service interface (CDI-RJ45) and the WLAN interface.
- Only activate one service interface (CDI-RJ45 or WLAN interface).
- If simultaneous communication is necessary: configure different IP address ranges, e.g. 192.168.0.1 (WLAN interface) and 192.168.1.212 (CDI-RJ45 service interface).

Preparing the mobile terminal

- Enable WLAN on the mobile terminal.

Establishing a WLAN connection from the mobile terminal to the measuring device

1. In the WLAN settings of the mobile terminal:
   Select the measuring device using the SSID (e.g. EH_t-mass_300_A802000).
2. If necessary, select the WPA2 encryption method.
3. Enter the password:
   Serial number of the measuring device ex-works (e.g. L100A802000).
   ↳ The LED on the display module flashes. It is now possible to operate the measuring device with the web browser, FieldCare or DeviceCare.

The serial number can be found on the nameplate.

To ensure the safe and swift assignment of the WLAN network to the measuring point, it is advisable to change the SSID name. It should be possible to clearly assign the new SSID name to the measuring point (e.g. tag name) because it is displayed as the WLAN network.

Terminating the WLAN connection

- After configuring the device:
  Terminate the WLAN connection between the mobile terminal and measuring device.

Starting the Web browser

1. Start the Web browser on the computer.

www.nicsanat.com
021-87700210
NIC SANAT
نیک صنعت

2. Enter the IP address of the web server in the address line of the web browser: 192.168.1.212
   ↳ The login page appears.

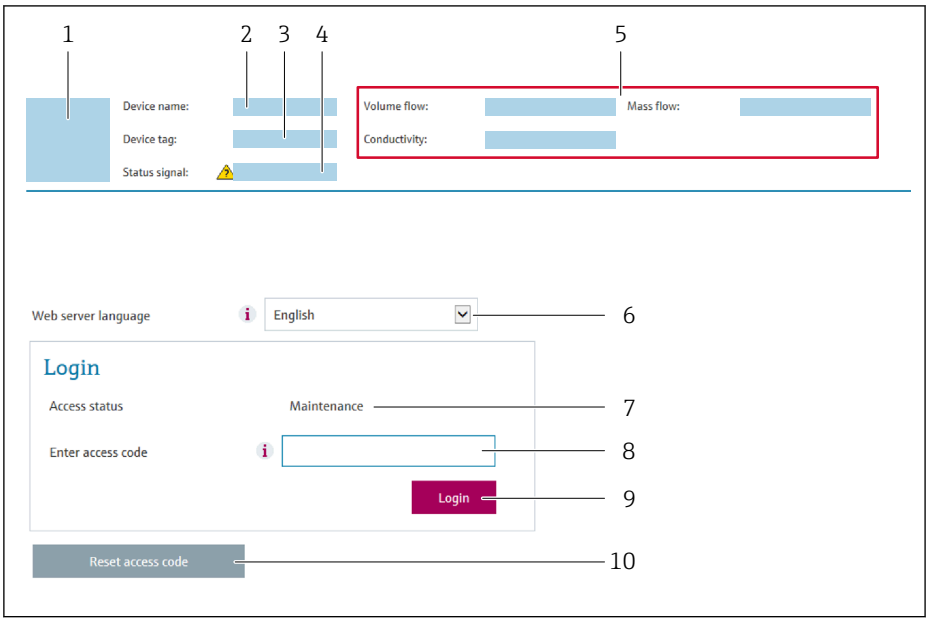

1 *Picture of device*
2 *Device name*
3 *Device tag (→ 🗎 80)*
4 *Status signal*
5 *Current measured values*
6 *Operating language*
7 *User role*
8 *Access code*
9 *Login*
10 *Reset access code (→ 🗎 115)*

If a login page does not appear, or if the page is incomplete → 🗎 140

7.4.4 Logging on

1. Select the preferred operating language for the Web browser.
2. Enter the user-specific access code.
3. Press **OK** to confirm your entry.

Access code	0000 (factory setting); can be changed by customer

If no action is performed for 10 minutes, the Web browser automatically returns to the login page.

www.nicsanat.com 021-87700210 NIC SANAT نیک صنعت

7.4.5 User interface

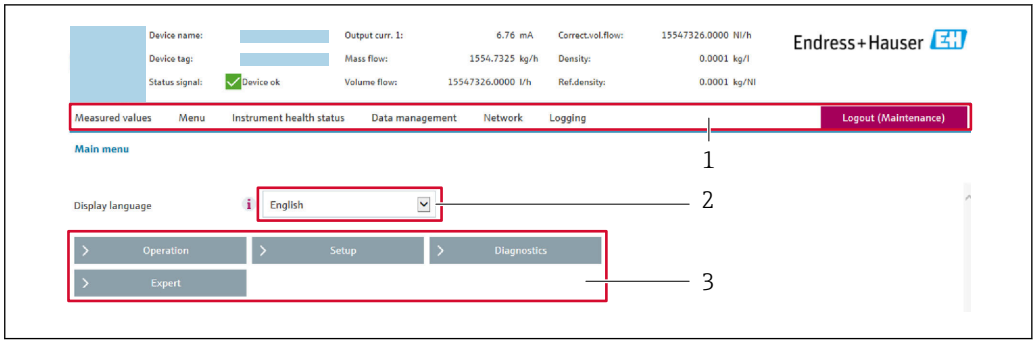

A0029418

1 *Function row*
2 *Local display language*
3 *Navigation area*

Header

The following information appears in the header:
- Device name
- Device tag
- Device status with status signal → 145
- Current measured values

Function row

Functions	Meaning
Measured values	Displays the measured values of the device
Menu	▪ Access to the operating menu from the measuring device ▪ The structure of the operating menu is the same as for the local display Detailed information on the structure of the operating menu: see the Description of Device Parameters
Device status	Displays the diagnostic messages currently pending, listed in order of priority

Data management	Data exchange between computer and measuring device:
	▪ Device configuration:
	  ▪ Load settings from the device (XML format, save configuration)
	  ▪ Save settings to the device (XML format, restore configuration)
	▪ Logbook - Export Event logbook (.csv file)
	▪ Documents - Export documents:
	  ▪ Export backup data record (.csv file, create documentation of the measuring point configuration)
	  ▪ Verification report (PDF file, only available with the "Heartbeat Verification" application package)
	▪ Firmware update - Flashing a firmware version

Network	Configuration and checking of all the parameters required for establishing the connection to the measuring device: ▪ Network settings (e.g. IP address, MAC address) ▪ Device information (e.g. serial number, firmware version)
Logout	End the operation and call up the login page

Navigation area

The menus, the associated submenus and parameters can be selected in the navigation area.

www.nicsanat.com
021-87700210
NIC SANAT
نیک صنعت

Working area

Depending on the selected function and the related submenus, various actions can be performed in this area:
- Configuring parameters
- Reading measured values
- Calling up help text
- Starting an upload/download

7.4.6 Disabling the Web server

The Web server of the measuring device can be switched on and off as required using the **Web server functionality** parameter.

Navigation

"Expert" menu → Communication → Web server

Parameter overview with brief description

Parameter	Description	Selection
Web server functionality	Switch the Web server on and off.	▪ Off ▪ HTML Off ▪ On

Function scope of the "Web server functionality" parameter

Option	Description
Off	▪ The Web server is completely disabled. ▪ Port 80 is locked.
On	▪ The complete Web server functionality is available. ▪ JavaScript is used. ▪ The password is transferred in an encrypted state. ▪ Any change to the password is also transferred in an encrypted state.

Enabling the Web server

If the Web server is disabled it can only be re-enabled with the **Web server functionality** parameter via the following operating options:
- Via local display
- Via Bedientool "FieldCare"
- Via "DeviceCare" operating tool

7.4.7 Logging out

Before logging out, perform a data backup via the **Data management** function (upload configuration from device) if necessary.

1. Select the **Logout** entry in the function row.
   ↳ The home page with the Login box appears.
2. Close the Web browser.
3. If no longer needed:
   Reset the modified properties of the Internet protocol (TCP/IP) → 📄 62.

www.nicsanat.com 021-87700210 NIC SANAT نیک صنعت

7.5 Access to the operating menu via the operating tool

The structure of the operating menu in the operating tools is the same as for operation via the local display.

7.5.1 Connecting the operating tool

Via Modbus RS485 protocol

This communication interface is available in device versions with a Modbus RS485 output.

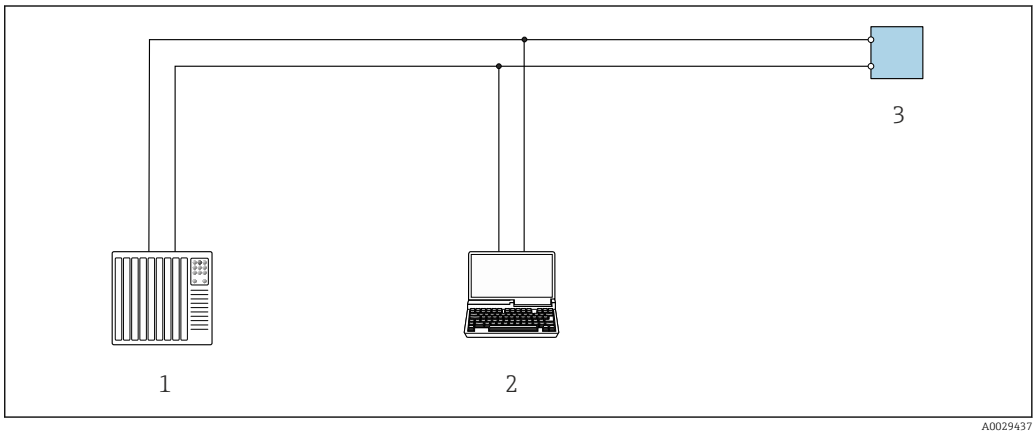

32 Options for remote operation via Modbus RS485 protocol (active)

1 Control system (e.g. PLC)
2 Computer with web browser (e.g. Microsoft Edge) to access the integrated device web server or with operating tool (e.g. FieldCare, DeviceCare) with COM DTM "CDI Communication TCP/IP" or Modbus DTM
3 Transmitter

Service interface

Via service interface (CDI-RJ45)

A point-to-point connection can be established to configure the device on site. With the housing open, the connection is established directly via the service interface (CDI-RJ45) of the device.

An adapter for the RJ45 to the M12 plug is optionally available for the non-hazardous area:
Order code for "Accessories", option **NB**: "Adapter RJ45 M12 (service interface)"

The adapter connects the service interface (CDI-RJ45) to an M12 plug mounted in the cable entry. The connection to the service interface can be established via an M12 plug without opening the device.

www.nicsanat.com
021-87700210
NIC SANAT
نیک صنعت

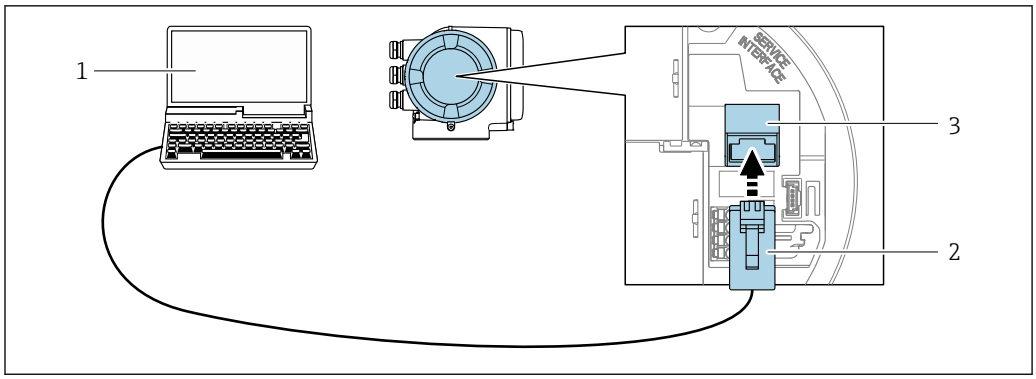

33 Connection via service interface (CDI-RJ45)

1 *Computer with web browser (e.g. Microsoft Internet Explorer, Microsoft Edge) to access the integrated web server or with an operating tool "FieldCare", "DeviceCare" with COM DTM "CDI Communication TCP/IP" or Modbus DTM*
2 *Standard Ethernet connecting cable with RJ45 plug*
3 *Service interface (CDI-RJ45) of the measuring device with access to the integrated web server*

Via WLAN interface

The optional WLAN interface is available on the following device version:
Order code for "Display; operation", option G "4-line, illuminated; touch control + WLAN"

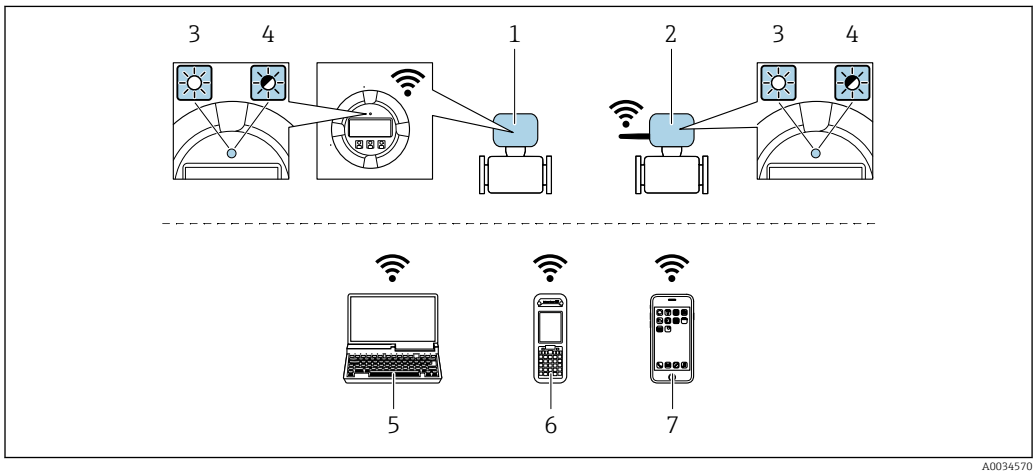

1 *Transmitter with integrated WLAN antenna*
2 *Transmitter with external WLAN antenna*
3 *LED lit constantly: WLAN reception is enabled on measuring device*
4 *LED flashing: WLAN connection established between operating unit and measuring device*
5 *Computer with WLAN interface and web browser (e.g. Microsoft Internet Explorer, Microsoft Edge) for accessing the integrated device web server or with operating tool (e.g. FieldCare, DeviceCare)*
6 *Mobile handheld terminal with WLAN interface and web browser (e.g. Microsoft Internet Explorer, Microsoft Edge) for accessing the integrated device web server or operating tool (e.g. FieldCare, DeviceCare)*
7 *Smart phone or tablet (e.g. Field Xpert SMT70)*

Function	WLAN: IEEE 802.11 b/g (2.4 GHz)
Encryption	WPA2-PSK AES-128 (in accordance with IEEE 802.11i)
Configurable WLAN channels	1 to 11
Degree of protection	IP67
Available antennas	▪ Internal antenna ▪ External antenna (optional) In the event of poor transmission/reception conditions at the place of installation. Only 1 antenna is active at any one time!

www.nicsanat.com
021-87700210
NIC SANAT
نیک صنعت

Range	▪ Internal antenna: typically 10 m (32 ft) ▪ External antenna: typically 50 m (164 ft)
Materials (external antenna)	▪ Antenna: ASA plastic (acrylonitrile styrene acrylate) and nickel-plated brass ▪ Adapter: Stainless steel and nickel-plated brass ▪ Cable: Polyethylene ▪ Plug: Nickel-plated brass ▪ Angle bracket: Stainless steel

Configuring the Internet protocol of the mobile terminal

NOTICE

If the WLAN connection is lost during the configuration, settings made may be lost.

▶ Make sure that the WLAN connection is not disconnected while configuring the device.

NOTICE

Note the following to avoid a network conflict:

▶ Avoid accessing the measuring device simultaneously from the same mobile terminal via the service interface (CDI-RJ45) and the WLAN interface.
▶ Only activate one service interface (CDI-RJ45 or WLAN interface).
▶ If simultaneous communication is necessary: configure different IP address ranges, e.g. 192.168.0.1 (WLAN interface) and 192.168.1.212 (CDI-RJ45 service interface).

Preparing the mobile terminal

▶ Enable WLAN on the mobile terminal.

Establishing a WLAN connection from the mobile terminal to the measuring device

1. In the WLAN settings of the mobile terminal:
   Select the measuring device using the SSID (e.g. EH_t-mass_300_A802000).
2. If necessary, select the WPA2 encryption method.
3. Enter the password:
   Serial number of the measuring device ex-works (e.g. L100A802000).
   ↳ The LED on the display module flashes. It is now possible to operate the measuring device with the web browser, FieldCare or DeviceCare.

The serial number can be found on the nameplate.

To ensure the safe and swift assignment of the WLAN network to the measuring point, it is advisable to change the SSID name. It should be possible to clearly assign the new SSID name to the measuring point (e.g. tag name) because it is displayed as the WLAN network.

Terminating the WLAN connection

▶ After configuring the device:
  Terminate the WLAN connection between the mobile terminal and measuring device.

7.5.2 FieldCare

Function range

FDT-based (Field Device Technology) plant asset management tool from Endress+Hauser. It can configure all smart field units in a system and helps you manage them. By using the status information, it is also a simple but effective way of checking their status and condition.

www.nicsanat.com
021-87700210
NIC SANAT
نیک صنعت

Access is via:
- CDI-RJ45 service interface → 📄 67
- WLAN interface → 📄 68

Typical functions:
- Transmitter parameter configuration
- Loading and saving of device data (upload/download)
- Documentation of the measuring point
- Visualization of the measured value memory (line recorder) and event logbook

- Operating Instructions BA00027S
- Operating Instructions BA00059S

Source for device description files → 📄 72

Establishing a connection

- Operating Instructions BA00027S
- Operating Instructions BA00059S

User interface

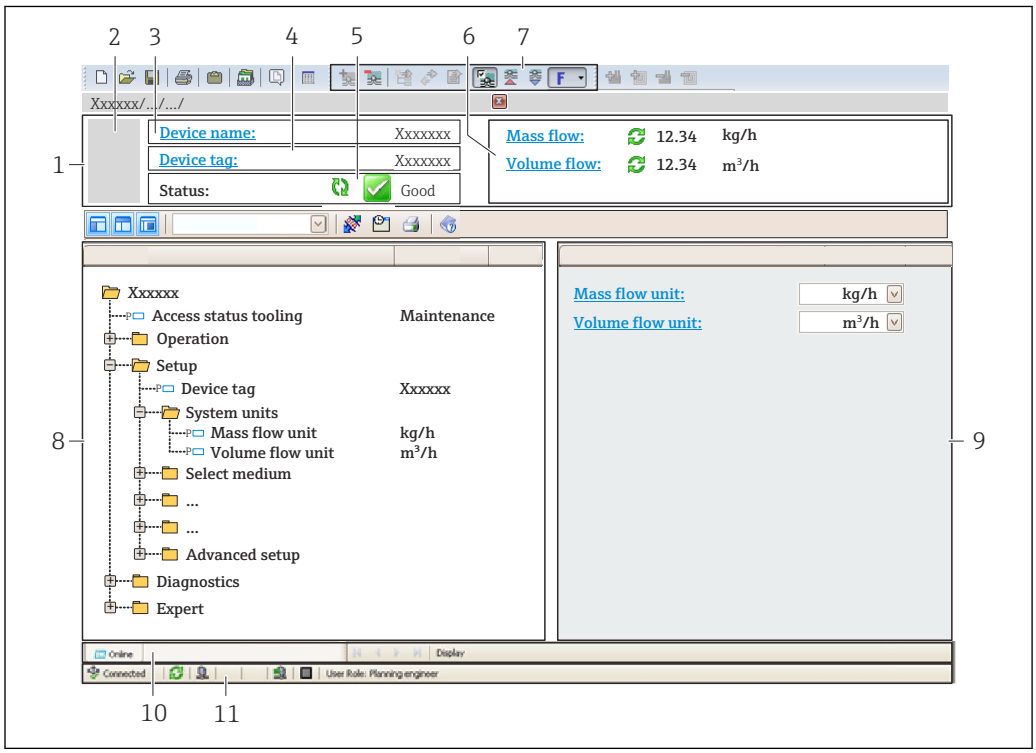

A0021051-EN

1 *Header*
2 *Picture of device*
3 *Device name*
4 *Device tag*
5 *Status area with status signal → 📄 145*
6 *Display area for current measured values*
7 *Editing toolbar with additional functions such as save/load, event list and create documentation*
8 *Navigation area with operating menu structure*
9 *Work area*
10 *Action area*
11 *Status area*

www.nicsanat.com
021-87700210
NIC SANAT
نیک صنعت

7.5.3 DeviceCare

Function range

Tool for connecting and configuring Endress+Hauser field devices.

The fastest way to configure Endress+Hauser field devices is with the dedicated "DeviceCare" tool. Together with the device type managers (DTMs) it presents a convenient, comprehensive solution.

Innovation brochure IN01047S

Source for device description files → 72

www.nicsanat.com
021-87700210
NIC SANAT
نیک صنعت

8 System integration

8.1 Overview of device description files

8.1.1 Current version data for the device

Firmware version	01.00.zz	▪ On the title page of the Operating Instructions ▪ On the transmitter nameplate → 🗎 15 ▪ **Firmware version** parameter Diagnostics → Device information → Firmware version
Release date of firmware version	07.2020	---

For an overview of the various firmware versions for the device → 🗎 156

8.1.2 Operating tools

The suitable device description file for the individual operating tools is listed in the table below, along with information on where the file can be acquired.

Operating tool via service interface (CDI) or Modbus interface	Sources for obtaining device descriptions
FieldCare	▪ www.endress.com → Downloads area ▪ USB stick (contact Endress+Hauser) ▪ DVD (contact Endress+Hauser)
DeviceCare	▪ www.endress.com → Downloads area ▪ CD-ROM (contact Endress+Hauser) ▪ DVD (contact Endress+Hauser)

8.2 Compatibility with earlier model

If the device is replaced, the measuring device 300 supports the compatibility of the Modbus registers for the process variables and the diagnostic information with the previous model . It is not necessary to change the engineering parameters in the automation system.

Compatible Modbus registers: process variables

Process variable	Compatible Modbus registers
Mass flow	2007
Volume flow	2009
Totalizer 1	2610
Totalizer 2	2810
Totalizer 3	3010

www.nicsanat.com 021-87700210 NIC SANAT نیک صنعت

Compatible Modbus registers: diagnostic information

Diagnostic information	Compatible Modbus registers
Diagnostic code (data type: String), e.g. F270	6821
Diagnostic number (data type: Integer), e.g. 270	6859

The Modbus registers are compatible but the diagnostic numbers are not. Overview of the new diagnostic numbers → 148.

8.3 Modbus RS485 information

8.3.1 Function codes

Function codes are used to define which read or write action is carried out via the Modbus protocol. The measuring device supports the following function codes:

Code	Name	Description	Application
03	Read holding register	Master reads one or more Modbus registers from the device. A maximum of 125 consecutive registers can be read with 1 telegram: 1 register = 2 bytes The measuring device does not make a distinction between function codes 03 and 04; these codes therefore yield the same result.	Read device parameters with read and write access Example: Read mass flow
04	Read input register	Master reads one or more Modbus registers from the device. A maximum of 125 consecutive registers can be read with 1 telegram: 1 register = 2 bytes The measuring device does not make a distinction between function codes 03 and 04; these codes therefore yield the same result.	Read device parameters with read access Example: Read totalizer value
06	Write single registers	Master writes a new value to **one** Modbus register of the measuring device. Use function code 16 to write multiple registers with just 1 telegram.	Write only 1 device parameter Example: reset totalizer
08	Diagnostics	Master checks the communication connection to the measuring device. The following "Diagnostics codes" are supported: ▪ Sub-function 00 = Return query data (loopback test) ▪ Sub-function 02 = Return diagnostics register	

www.nicsanat.com
021-87700210
NIC SANAT
نیک صنعت

Code	Name	Description	Application
16	Write multiple registers	Master writes a new value to multiple Modbus registers of the device. A maximum of 120 consecutive registers can be written with 1 telegram. If the required device parameters are not available as a group, yet must nevertheless be addressed with a single telegram, use Modbus data map → 75	Write multiple device parameters
23	Read/Write multiple registers	Master reads and writes a maximum of 118 Modbus registers of the measuring device simultaneously with 1 telegram. Write access is executed **before** read access.	Write and read multiple device parameters Example: ▪ Read mass flow ▪ Reset totalizer

Broadcast messages are only allowed with function codes 06, 16 and 23.

8.3.2 Register information

For an overview of device parameters with their respective Modbus register information, please refer to the "Modbus RS485 register information" section in the "Description of device parameters" documentation .

8.3.3 Response time

Response time of the measuring device to the request telegram of the Modbus master: typically 3 to 5 ms

8.3.4 Data types

The measuring device supports the following data types:

FLOAT (floating point number IEEE 754) Data length = 4 bytes (2 registers)			
Byte 3	Byte 2	Byte 1	Byte 0
SEEEEEEE	EMMMMMMM	MMMMMMMM	MMMMMMMM
S = sign, E = exponent, M = mantissa			

INTEGER Data length = 2 bytes (1 register)	
Byte 1	Byte 0
Most significant byte (MSB)	Least significant byte (LSB)

STRING Data length = depends on the device parameter, e.g. presentation of a device parameter with a data length = 18 bytes (9 registers)				
Byte 17	Byte 16	...	Byte 1	Byte 0
Most significant byte (MSB)		...		Least significant byte (LSB)

www.nicsanat.com
021-87700210
NIC SANAT
نیک صنعت

8.3.5 Byte transmission sequence

Byte addressing, i.e. the transmission sequence of the bytes, is not specified in the Modbus specification. For this reason, it is important to coordinate or match the addressing method between the master and slave during commissioning. This can be configured in the measuring device using the **Byte order** parameter.

The bytes are transmitted depending on the selection in the **Byte order** parameter:

FLOAT				
	Sequence			
Options	1.	2.	3.	4.
1 – 0 – 3 – 2 *	Byte 1 (MMMMMMMM)	Byte 0 (MMMMMMMM)	Byte 3 (SEEEEEEE)	Byte 2 (EMMMMMMM)
0 – 1 – 2 – 3	Byte 0 (MMMMMMMM)	Byte 1 (MMMMMMMM)	Byte 2 (EMMMMMMM)	Byte 3 (SEEEEEEE)
2 – 3 – 0 – 1	Byte 2 (EMMMMMMM)	Byte 3 (SEEEEEEE)	Byte 0 (MMMMMMM)	Byte 1 (MMMMMMM)
3 – 2 – 1 – 0	Byte 3 (SEEEEEEE)	Byte 2 (EMMMMMMM)	Byte 1 (MMMMMMMM)	Byte 0 (MMMMMMMM)
* = factory setting, S = sign, E = exponent, M = mantissa				

INTEGER		
	Sequence	
Options	1.	2.
1 – **0** – 3 – 2 * 3 – 2 – **1** – **0**	Byte 1 (MSB)	Byte 0 (LSB)
0 – **1** – 2 – 3 2 – 3 – **0** – **1**	Byte 0 (LSB)	Byte 1 (MSB)
* = factory setting, MSB = most significant byte, LSB = least significant byte		

STRING Presentation taking the example of a device parameter with a data length of 18 bytes.					
	Sequence				
Options	1.	2.	...	17.	18.
1 – **0** – 3 – 2 * 3 – 2 – **1** – **0**	Byte 17 (MSB)	Byte 16	...	Byte 1	Byte 0 (LSB)
0 – **1** – 2 – 3 2 – 3 – **0** – **1**	Byte 16	Byte 17 (MSB)	...	Byte 0 (LSB)	Byte 1
* = factory setting, MSB = most significant byte, LSB = least significant byte					

8.3.6 Modbus data map

Function of the Modbus data map

The device offers a special memory area, the Modbus data map (for a maximum of 16 device parameters), to allow users to call up multiple device parameters via Modbus RS485 and not only individual device parameters or a group of consecutive device parameters.

Grouping of device parameters is flexible and the Modbus master can read or write to the entire data block simultaneously with a single request telegram.

www.nicsanat.com
021-87700210
NIC SANAT
نیک صنعت

Structure of the Modbus data map

The Modbus data map consists of two data sets:
- Scan list: Configuration area
  The device parameters to be grouped are defined in a list by entering their Modbus RS485 register addresses in the list.
- Data area
  The measuring device reads out the register addresses entered in the scan list cyclically and writes the associated device data (values) to the data area.

For an overview of device parameters with their respective Modbus register information, please refer to the "Modbus RS485 register information" section in the "Description of device parameters" documentation .

Scan list configuration

For configuration, the Modbus RS485 register addresses of the device parameters to be grouped must be entered in the scan list. Please note the following basic requirements of the scan list:

Max. entries	16 device parameters
Supported device parameters	Only parameters with the following characteristics are supported: ▪ Access type: read or write access ▪ Data type: float or integer

Configuration of the scan list via FieldCare or DeviceCare

Carried out using the operating menu of the measuring device:
Expert → Communication → Modbus data map → Scan list register 0 to 15

Scan list	
No.	**Configuration register**
0	Scan list register 0
...	...
15	Scan list register 15

Configuration of the scan list via Modbus RS485

Carried out using register addresses 5001 - 5016

Scan list			
No.	**Modbus RS485 register**	**Data type**	**Configuration register**
0	5001	Integer	Scan list register 0
...	...	Integer	...
15	5016	Integer	Scan list register 15

Reading out data via Modbus RS485

The Modbus master accesses the data area of the Modbus data map to read out the current values of the device parameters defined in the scan list.

Master access to data area	Via register addresses 5051-5081

www.nicsanat.com 021-87700210 NIC SANAT نیک صنعت

Data area				
Device parameter value	**Modbus RS485 register**		**Data type***	**Access****
	Start register	**End register (Float only)**		
Value of scan list register 0	5051	5052	Integer/float	Read/write
Value of scan list register 1	5053	5054	Integer/float	Read/write
Value of scan list register ...	...	...	...	...
Value of scan list register 15	5081	5082	Integer/float	Read/write

* Data type depends on the device parameters entered in the scan list.
** Data access depends on the device parameters entered in the scan list. If the device parameter entered supports read and write access, the parameter can also be accessed via the data area.

www.nicsanat.com
021-87700210
NIC SANAT
نیک صنعت

9 Commissioning

9.1 Post-mounting and post-connection check

Before commissioning the device:

- Make sure that the post-installation and post-connection checks have been performed successfully.

- Checklist for "Post-mounting" check→ 32
- Checklist for "Post-connection check" → 45

9.2 Switching on the measuring device

- Switch on the device upon successful completion of the post-mounting and post-connection check.
  - After a successful startup, the local display switches automatically from the startup display to the operational display.

If nothing appears on the local display or if a diagnostic message is displayed, refer to the section on "Diagnostics and troubleshooting" → 139.

9.3 Setting the operating language

Factory setting: English or ordered local language

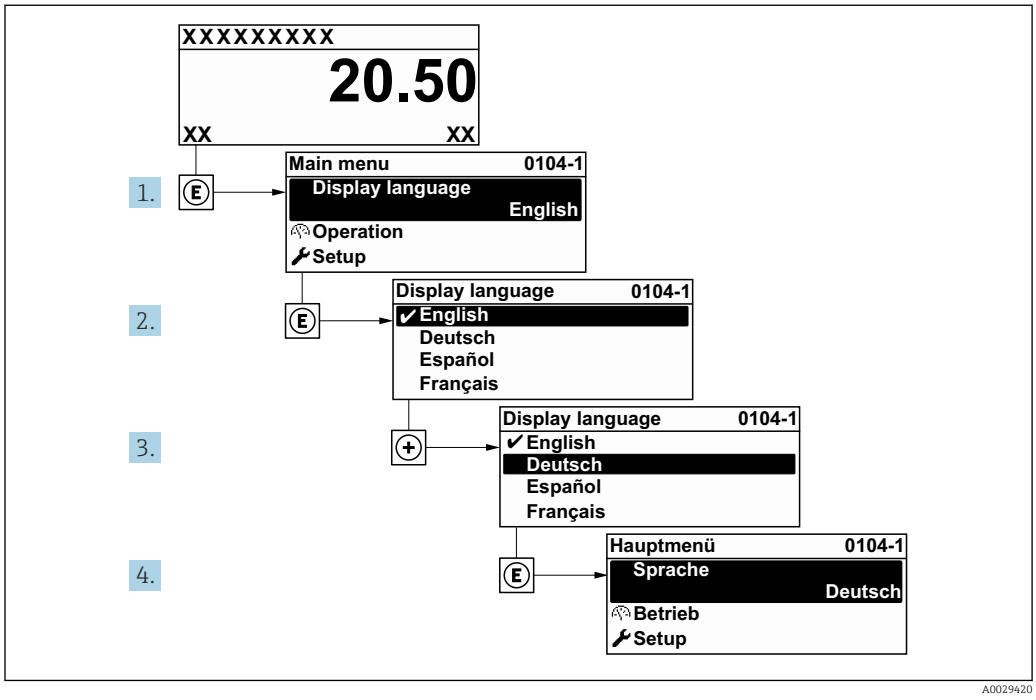

34 *Taking the example of the local display*

www.nicsanat.com
021-87700210
NIC SANAT

9.4 Configuring the measuring device

The **Setup** menu with its guided wizards contains all the parameters needed for standard operation.

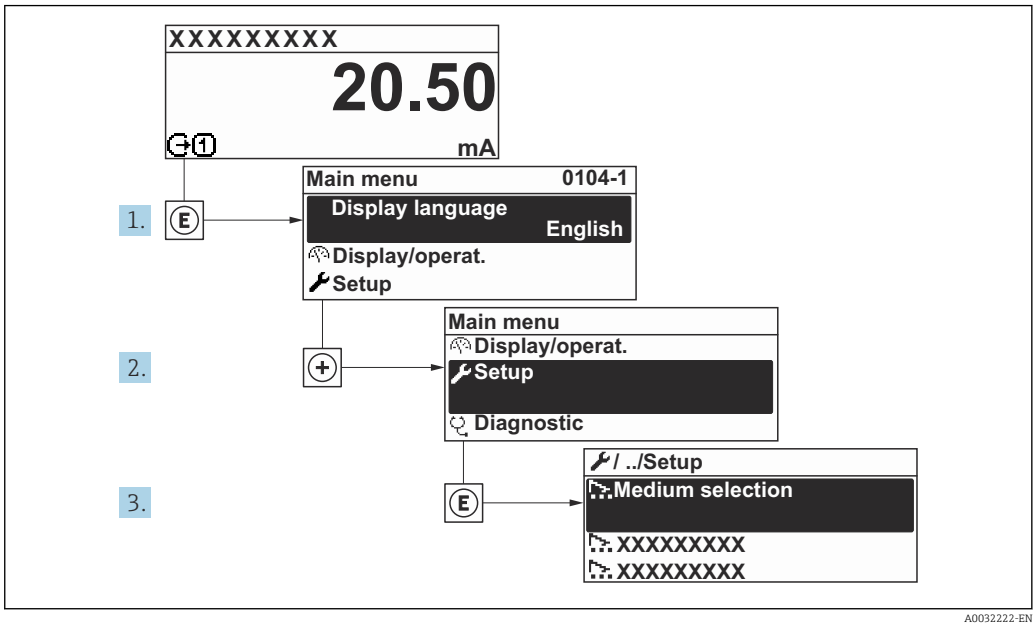

35 *Navigation to "Setup" menu using the example of the local display*

The number of submenus and parameters can vary depending on the device version. Certain submenus and parameters in these submenus are not described in the Operating Instructions. Instead a description is provided in the Special Documentation for the device ("Supplementary documentation").

Setup	
Device tag	
▶ Measurement mode	→ 80
▶ Reference conditions	→ 84
▶ Sensor adjustment	→ 85
▶ System units	→ 86
▶ Communication	→ 88
▶ I/O configuration	→ 89
▶ Current input 1 to n	→ 90
▶ Status input 1 to n	
▶ Current output 1 to n	→ 92

www.nicsanat.com
021-87700210
NIC SANAT
نیک صنعت

▶ **Pulse/frequency/switch output 1 to n**	→ 📄 95
▶ **Relay output 1 to n**	→ 📄 101
▶ **Display**	→ 📄 102
▶ **Low flow cut off**	→ 📄 105
▶ **Advanced setup**	→ 📄 106

9.4.1 Defining the tag name

To enable fast identification of the measuring point within the system, you can enter a unique designation using the **Device tag** parameter and thus change the factory setting.

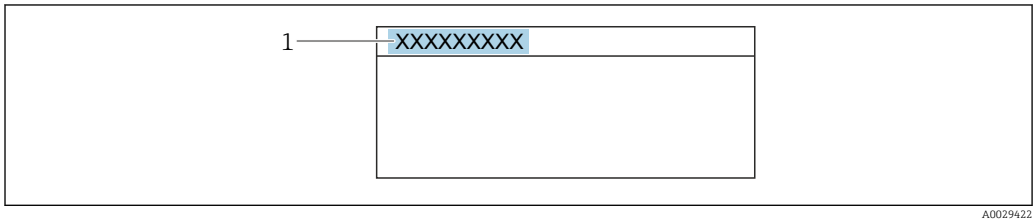

36 Header of the operational display with tag name

1 Tag name

Enter the tag name in the "FieldCare" operating tool → 📄 70

Navigation
"Setup" menu → Device tag

Parameter overview with brief description

Parameter	Description	User entry
Device tag	Enter the name for the measuring point.	Max. 32 characters, such as letters, numbers or special characters (e.g. @, %, /).

9.4.2 Configuring the measurement mode

Properties of the medium can be configured in the **Measurement mode** submenu.

Navigation
"Setup" menu → Measurement mode

▶ **Measurement mode**	
Measurement application	→ 📄 82
Select gas type	→ 📄 82

www.nicsanat.com
021-87700210
NIC SANAT
نیک صنعت

Gas	→ 82
Gas composition	→ 82
Mol% Air	→ 82
Mol% Ar	→ 83
Mol% C2H4	→ 83
Mol% C2H6	→ 83
Mol% C3H8	→ 83
Mol% CH4	→ 83
Mol% Cl2	→ 83
Mol% CO	→ 83
Mol% CO2	→ 83
Mol% H2	→ 83
Mol% H2O	→ 83
Mol% H2S	→ 83
Mol% HCl	→ 83
Mol% He	→ 83
Mol% Kr	→ 83
Mol% N2	→ 83
Mol% n-C4H10	→ 83
Mol% Ne	→ 84
Mol% NH3	→ 84
Mol% O2	→ 84
Mol% O3	→ 84
Mol% Xe	→ 84
Special gas name	→ 84

www.nicsanat.com 021-87700210 NIC SANAT نیک صنعت

Parameter overview with brief description

Parameter	Prerequisite	Description	Selection / User entry / User interface	Factory setting
Measurement application	–	Select measurement application.	▪ Air or compressed air ▪ Gas or gas mixture ▪ Energy	–
Select gas type	–	Select measured gas type.	▪ Single gas ▪ Gas mixture ▪ Special gas *	–
Gas	The **Single gas** option is selected in the **Select gas type** parameter parameter.	Select measured gas.	▪ Air ▪ Ammonia NH3 ▪ Argon Ar ▪ Butane C4H10 ▪ Carbon dioxide CO2 ▪ Carbon monoxide CO ▪ Chlorine Cl2 ▪ Ethane C2H6 ▪ Ethylene C2H4 ▪ Helium He ▪ Hydrogen H2 ▪ Hydrogen chloride HCl ▪ Hydrogen sulfide H2S ▪ Krypton Kr ▪ Methane CH4 ▪ Neon Ne ▪ Nitrogen N2 ▪ Oxygen O2 ▪ Ozone O3 ▪ Propane C3H8 ▪ Xenon Xe	–
Gas composition	The **Gas mixture** option is selected in the **Select gas type** parameter parameter.	Select measured gas mixture.	▪ Air ▪ Hydrogen H2 ▪ Helium He ▪ Neon Ne ▪ Argon Ar ▪ Krypton Kr ▪ Xenon Xe ▪ Nitrogen N2 ▪ Oxygen O2 ▪ Chlorine Cl2 ▪ Ammonia NH3 ▪ Carbon monoxide CO ▪ Carbon dioxide CO2 ▪ Hydrogen sulfide H2S ▪ Hydrogen chloride HCl ▪ Methane CH4 ▪ Propane C3H8 ▪ Ethane C2H6 ▪ Butane C4H10 ▪ Ethylene C2H4 ▪ Water ▪ Ozone O3	–
Mol% Air	–	Enter amount of substance for the gas mixture. Air	0 to 100 %	–

www.nicsanat.com 021-87700210 NIC SANAT نیک صنعت

Parameter	Prerequisite	Description	Selection / User entry / User interface	Factory setting
Mol% Ar	–	Enter amount of substance for the gas mixture. Ar = Argon	0 to 100 %	–
Mol% C2H4	–	Enter amount of substance for the gas mixture. C_2H_4 = ethylene	0 to 100 %	–
Mol% C2H6	–	Enter amount of substance for the gas mixture. C_2H_6 = ethane	0 to 100 %	–
Mol% C3H8	–	Enter amount of substance for the gas mixture. C_3H_8 = propane	0 to 100 %	–
Mol% CH4	–	Enter amount of substance for the gas mixture. CH_4 = methane	0 to 100 %	–
Mol% Cl2	–	Enter amount of substance for the gas mixture. Cl_2 = chlorine	0 to 100 %	–
Mol% CO	–	Enter amount of substance for the gas mixture. CO = carbon monoxide	0 to 100 %	–
Mol% CO2	–	Enter amount of substance for the gas mixture. CO_2 = carbon dioxide	0 to 100 %	–
Mol% H2	–	Enter amount of substance for the gas mixture. H_2 = hydrogen	0 to 100 %	–
Mol% H2O	–	Enter amount of substance for the gas mixture. H_2O = water	0 to 20 %	–
Mol% H2S	–	Enter amount of substance for the gas mixture. H_2S = hydrogen sulfide	0 to 100 %	–
Mol% HCl	–	Enter amount of substance for the gas mixture. HCl = hydrogen chloride	0 to 100 %	–
Mol% He	–	Enter amount of substance for the gas mixture. He = helium	0 to 100 %	–
Mol% Kr	–	Enter amount of substance for the gas mixture. Kr = krypton	0 to 100 %	–
Mol% N2	–	Enter amount of substance for the gas mixture. N_2 = nitrogen	0 to 100 %	–
Mol% n-C4H10	–	Enter amount of substance for the gas mixture. n-C_4H_{10} = n-butane	0 to 100 %	–

www.nicsanat.com 021-87700210 NIC SANAT نیک صنعت

Parameter	Prerequisite	Description	Selection / User entry / User interface	Factory setting
Mol% Ne	–	Enter amount of substance for the gas mixture. Ne = neon	0 to 100 %	–
Mol% NH3	–	Enter amount of substance for the gas mixture. NH_3 = ammonia	0 to 100 %	–
Mol% O2	–	Enter amount of substance for the gas mixture. O_2 = oxygen	0 to 100 %	–
Mol% O3	As a mixture, only possible with O2: ▪ O3: 0 to 35 % ▪ O2: 65 to 100 % O3 as single gas: 100 %	Enter amount of substance for the gas mixture.	0 to 100 %	–
Mol% Xe	–	Enter amount of substance for the gas mixture. Xe = xenon	0 to 100 %	–
Special gas name	**Special gas** option application package is available.	Shows the description of the gas ordered by the customer, e.g. gas name or gas composition.	-	-

* Visibility depends on order options or device settings

9.4.3 Configuring reference conditions

Reference properties can be configured in the **Reference conditions** submenu.

Navigation
"Setup" menu → Reference conditions

▶ **Reference conditions**

Reference conditions	→ 📄 85
Reference pressure	→ 📄 85
Reference temperature	→ 📄 85
FAD conditions	→ 📄 85
FAD pressure	→ 📄 85
FAD temperature	→ 📄 85
Reference combustion temperature	→ 📄 85
Reference combustion temperature	→ 📄 85

www.nicsanat.com 021-87700210 NIC SANAT نیک صنعت

Parameter overview with brief description

Parameter	Prerequisite	Description	Selection / User entry
Reference conditions	–	Select reference conditions for calculation of the corrected volume flow.	▪ 1013.25 mbara, 0 °C ▪ 1013.25 mbara, 15 °C ▪ 1013.25 mbara, 20 °C ▪ 1013.25 mbara, 25 °C ▪ 1000 mbara, 0 °C ▪ 1000 mbara, 15 °C ▪ 1000 mbara, 20 °C ▪ 1000 mbara, 25 °C ▪ 14.696 psia, 59 °F ▪ 14.696 psia, 60 °F ▪ User-defined
Reference pressure	The **Others** option is selected in the **Reference conditions** parameter.	Select reference conditions for the corrected volume flow.	0 to 250 bar a
Reference temperature	–	Enter reference temperature for calculating the reference density.	–200 to 450 °C
FAD conditions	The **Air or compressed air** option is selected in the **Measurement application** parameter parameter.	Select reference conditions for the calculation of the FAD density (FAD = free air delivery).	▪ 1000 mbara, 20 °C ▪ 14.504 psia, 68 °F ▪ User-defined
FAD pressure	▪ The **Air or compressed air** option is selected in the **Measurement application** parameter parameter. ▪ The **User-defined** option is selected in the **FAD conditions** parameter parameter.	Enter reference pressure for the calulation of the FAD density (FAD = free air delivery).	0 to 250 bar a
FAD temperature	▪ The **Air or compressed air** option is selected in the **Measurement application** parameter parameter. ▪ The **User-defined** option is selected in the **FAD conditions** parameter parameter.	Enter reference temperature for the calulation of the FAD density (FAD = free air delivery).	–200 to 450 °C
Reference combustion temperature	The **Energy** option is selected in the **Measurement application** parameter parameter.	Enter reference combustion temperature to calculate the natural gas energy value.	–200 to 450 °C
Reference combustion temperature	–	Select ref. temp. (reference combustion temperature) for calculating the gas energy value.	▪ 0 °C ▪ 15 °C ▪ 20 °C ▪ 25 °C ▪ 60 °F ▪ User-defined

9.4.4 Sensor adjustment

Parameters pertaining to the pipe shape of the insertion version can be configured in the **Sensor adjustment** submenu.

The number of submenus and parameters can vary depending on the device version. Certain submenus and parameters in these submenus are not described in the Operating Instructions. Instead a description is provided in the Special Documentation for the device ("Supplementary documentation").

▶ **Sensor adjustment**

Installation direction	→ 86
Installation factor	→ 86

www.nicsanat.com
021-87700210
NIC SANAT
نیک صنعت

Pipe shape	→ 86
Pipe inner diameter	→ 86
Duct height	→ 86
Duct width	→ 86

Parameter overview with brief description

Parameter	Prerequisite	Description	Selection / User entry
Installation direction	–	Set sign of flow direction to match the direction of the arrow on the sensor.	▪ Forward flow ▪ Reverse flow
Installation factor	–	Enter factor to compensate the mounting-related measurement error.	0.01 to 100.0
Pipe shape	Only available with t-mass I.	Select the shape of the pipe.	▪ Circular ▪ Rectangular
Pipe inner diameter	Only available with t-mass I.	Enter the internal diameter of a circular pipe.	0.050 to 5 m
Duct height	Only available with t-mass I.	Enter inner duct height. Duct height and sensor shaft are parallel.	0.050 to 5 m
Duct width	Only available with t-mass I.	Enter inner duct width. The duct width is vertical to the sensor shaft.	0.050 to 5 m

9.4.5 Setting the system units

In the **System units** submenu the units of all the measured values can be set.

The number of submenus and parameters can vary depending on the device version. Certain submenus and parameters in these submenus are not described in the Operating Instructions. Instead a description is provided in the Special Documentation for the device ("Supplementary documentation").

Navigation

"Setup" menu → System units

▶ **System units**	
Mass flow unit	→ 87
Mass unit	→ 87
Corrected volume flow unit	→ 87
Corrected volume unit	→ 87
Volume flow unit	→ 87
Volume unit	→ 87

www.nicsanat.com
021-87700210
NIC SANAT
نیک صنعت

FAD volume flow unit	→ 87
FAD volume unit	→ 87
Energy flow unit	→ 87
Energy unit	→ 88
Calorific value unit	→ 88
Density unit	→ 88
Temperature unit	→ 88
Pressure unit	→ 88
Velocity unit	→ 88
Length unit	→ 88
Date/time format	→ 88

Parameter overview with brief description

Parameter	Description	Selection	Factory setting
Mass flow unit	Select mass flow unit.	Unit choose list	Depends on country: ▪ kg/h ▪ lb/h
Mass unit	Select mass unit.	Unit choose list	Country-specific: ▪ kg ▪ lb
Corrected volume flow unit	Select corrected volume flow unit.	Unit choose list	Country-specific: ▪ Nm^3/h ▪ Sft^3/h
Corrected volume unit	Select corrected volume unit.	Unit choose list	Country-specific: ▪ Nm^3 ▪ Sft^3
Volume flow unit	Select volume flow unit.	Unit choose list	Depends on country: ▪ l/h ▪ ft^3/h
Volume unit	Select volume unit.	Unit choose list	Country-specific: ▪ ft^3 ▪ m^3
FAD volume flow unit	Select FAD volumen flow unit (FAD = free air delivery).	Unit choose list	Country-specific: ▪ m^3 FAD/h ▪ cf FAD/min
FAD volume unit	Select FAD volumen unit (FAD = free air delivery).	Unit choose list	Country-specific: ▪ m^3 FAD ▪ cf FAD
Energy flow unit	Select energy flow unit.	Unit choose list	Country-specific: ▪ kW ▪ Btu/h

www.nicsanat.com 021-87700210 NIC SANAT نیک صنعت

Parameter	Description	Selection	Factory setting
Energy unit	Select energy unit.	Unit choose list	Country-specific: ▪ kWh ▪ Btu
Calorific value unit	Select calorific value unit.	Unit choose list	Country-specific: ▪ kWh/Nm³ ▪ Btu/Sft³
Density unit	Select density unit.	Unit choose list	Country-specific: ▪ kg/m³ ▪ lb/ft³
Temperature unit	Select temperature unit.	Unit choose list	Country-specific: ▪ °C ▪ °F
Pressure unit	Select process pressure unit.	Unit choose list	Country-specific: ▪ bar a ▪ psi a
Velocity unit	Select velocity unit.	Unit choose list	Country-specific: ▪ m/s ▪ ft/s
Length unit	Select length unit for nominal diameter.	Unit choose list	Country-specific: ▪ mm ▪ in
Date/time format	Select date and time format.	▪ dd.mm.yy hh:mm ▪ dd.mm.yy hh:mm am/pm ▪ mm/dd/yy hh:mm ▪ mm/dd/yy hh:mm am/pm	–

9.4.6 Configuring the communication interface

The **Communication** submenu guides you systematically through all the parameters that have to be configured for selecting and setting the communication interface.

Navigation
"Setup" menu → Communication

▶ **Communication**

Bus address	→ 📄 89
Baudrate	→ 📄 89
Data transfer mode	→ 📄 89
Parity	→ 📄 89
Byte order	→ 📄 89
Failure mode	→ 📄 89

www.nicsanat.com 021-87700210 NIC SANAT نیک صنعت

Parameter overview with brief description

Parameter	Description	User entry / Selection
Bus address	Enter device address.	1 to 247
Baudrate	Define data transfer speed.	▪ 1200 BAUD ▪ 2400 BAUD ▪ 4800 BAUD ▪ 9600 BAUD ▪ 19200 BAUD ▪ 38400 BAUD ▪ 57600 BAUD ▪ 115200 BAUD
Data transfer mode	Select data transfer mode.	▪ ASCII ▪ RTU
Parity	Select parity bits.	Picklist **ASCII** option: ▪ 0 = **Even** option ▪ 1 = **Odd** option Picklist **RTU** option: ▪ 0 = **Even** option ▪ 1 = **Odd** option ▪ 2 = **None / 1 stop bit** option ▪ 3 = **None / 2 stop bits** option
Byte order	Select byte transmission sequence.	▪ 0-1-2-3 ▪ 3-2-1-0 ▪ 1-0-3-2 ▪ 2-3-0-1
Failure mode	Select measured value output behavior when a diagnostic message occurs via Modbus communication. NaN [1]	▪ NaN value ▪ Last valid value

1) Not a Number

9.4.7 Displaying the I/O configuration

The **I/O configuration** submenu guides the user systematically through all the parameters in which the configuration of the I/O modules is displayed.

Navigation

"Setup" menu → I/O configuration

▶ I/O configuration	
I/O module 1 to n terminal numbers	→ 📄 90
I/O module 1 to n information	→ 📄 90
I/O module 1 to n type	→ 📄 90
Apply I/O configuration	→ 📄 90
I/O alteration code	→ 📄 90

www.nicsanat.com
021-87700210
NIC SANAT
نیک صنعت

Parameter overview with brief description

Parameter	Description	User interface / Selection / User entry
I/O module 1 to n terminal numbers	Shows the terminal numbers used by the I/O module.	▪ Not used ▪ 26-27 (I/O 1) ▪ 24-25 (I/O 2) ▪ 22-23 (I/O 3)
I/O module 1 to n information	Shows information of the plugged I/O module.	▪ Not plugged ▪ Invalid ▪ Not configurable ▪ Configurable ▪ MODBUS
I/O module 1 to n type	Shows the I/O module type.	▪ Off ▪ Current output * ▪ Current input * ▪ Status input * ▪ Pulse/frequency/switch output * ▪ Relay output *
Apply I/O configuration	Apply parameterization of the freely configurable I/O module.	▪ No ▪ Yes
I/O alteration code	Enter the code in order to change the I/O configuration.	Positive integer

* Visibility depends on order options or device settings

9.4.8 Configuring the current input

The **"Current input" wizard** guides the user systematically through all the parameters that have to be set for configuring the current input.

Navigation
"Setup" menu → Current input

▶ **Current input 1 to n**

Current span	→ 📄 91
Terminal number	→ 📄 91
Signal mode	→ 📄 91
Terminal number	→ 📄 91
0/4 mA value	→ 📄 91
20 mA value	→ 📄 91
Failure mode	→ 📄 91
Terminal number	→ 📄 91
Failure value	→ 📄 91
Terminal number	→ 📄 91

www.nicsanat.com 021-87700210 NIC SANAT نیک صنعت

Parameter overview with brief description

Parameter	Prerequisite	Description	Selection / User interface / User entry	Factory setting
Current span	–	Select current range for process value output and upper/lower level for alarm signal.	▪ 4...20 mA (4...20.5 mA) ▪ 4...20 mA NAMUR (3.8...20.5 mA) ▪ 4...20 mA US (3.9...20.8 mA) ▪ 0...20 mA (0...20.5 mA)	Country-specific: ▪ 4...20 mA NAMUR (3.8...20.5 mA) ▪ 4...20 mA US (3.9...20.8 mA)
Terminal number	–	Shows the terminal numbers used by the current input module.	▪ Not used ▪ 24-25 (I/O 2) ▪ 22-23 (I/O 3)	–
Signal mode	The measuring device is **not** approved for use in the hazardous area with type of protection Ex-i.	Select the signal mode for the current input.	▪ Passive ▪ Active *	Active
0/4 mA value	–	Enter 4 mA value.	Signed floating-point number	–
20 mA value	–	Enter 20 mA value.	Signed floating-point number	Depends on country and nominal diameter
Failure mode	–	Define input behavior in alarm condition.	▪ Alarm ▪ Last valid value ▪ Defined value	–
Failure value	In the **Failure mode** parameter, the **Defined value** option is selected.	Enter value to be used by the device if input value from external device is missing.	Signed floating-point number	–

* Visibility depends on order options or device settings

9.4.9 Configuring the status input

The **Status input** submenu guides the user systematically through all the parameters that have to be set for configuring the status input.

Navigation
"Setup" menu → Status input 1 to n

▶ Status input 1 to n	
Assign status input	→ 📄 92
Terminal number	→ 📄 92
Active level	→ 📄 92
Terminal number	→ 📄 92
Response time status input	→ 📄 92
Terminal number	→ 📄 92

www.nicsanat.com
021-87700210
NIC SANAT
نیک صنعت

Parameter overview with brief description

Parameter	Description	Selection / User interface / User entry
Assign status input	Select function for the status input.	▪ Off ▪ Reset totalizer 1 ▪ Reset totalizer 2 ▪ Reset totalizer 3 ▪ Reset all totalizers ▪ Flow override ▪ Gas group * ▪ Zero point adjustment
Terminal number	Shows the terminal numbers used by the status input module.	▪ Not used ▪ 24-25 (I/O 2) ▪ 22-23 (I/O 3)
Active level	Define input signal level at which the assigned function is triggered.	▪ High ▪ Low
Response time status input	Define the minimum amount of time the input signal level must be present before the selected function is triggered.	5 to 200 ms

* Visibility depends on order options or device settings

9.4.10 Configuring the current output

The **Current output** wizard guides you systematically through all the parameters that have to be set for configuring the current output.

Navigation
"Setup" menu → Current output

▶ **Current output 1 to n**

Assign current output 1 to n	→ 93
Terminal number	→ 93
Current span	→ 93
Terminal number	→ 93
Signal mode	→ 93
Terminal number	→ 93
0/4 mA value	→ 93
20 mA value	→ 93
Fixed current	→ 94
Terminal number	→ 93
Damping output 1 to n	→ 94

www.nicsanat.com 021-87700210 NIC SANAT نیک صنعت

Failure mode	→ 📄 94
Terminal number	→ 📄 93
Failure current	→ 📄 94
Terminal number	→ 📄 93

Parameter overview with brief description

Parameter	Prerequisite	Description	Selection / User interface / User entry	Factory setting
Assign current output 1 to n	–	Select process variable for current output.	▪ Off * ▪ Temperature ▪ Mass flow ▪ Corrected volume flow ▪ FAD volume flow * ▪ Volume flow ▪ Energy flow * ▪ Heat flow * ▪ Density ▪ Flow velocity ▪ Pressure ▪ 2nd temperature delta heat * ▪ Electronic temperature	–
Terminal number	–	Shows the terminal numbers used by the current output module.	▪ Not used ▪ 24-25 (I/O 2) ▪ 22-23 (I/O 3)	–
Current span	–	Select current range for process value output and upper/lower level for alarm signal.	▪ 4...20 mA NAMUR (3.8...20.5 mA) ▪ 4...20 mA US (3.9...20.8 mA) ▪ 4...20 mA (4... 20.5 mA) ▪ 0...20 mA (0... 20.5 mA) ▪ Fixed current	Depends on country: ▪ 4...20 mA NAMUR (3.8...20.5 mA) ▪ 4...20 mA US (3.9...20.8 mA)
Signal mode	–	Select the signal mode for the current output.	▪ Active * ▪ Passive *	Active
0/4 mA value	One of the following options is selected in the **Current span** parameter (→ 📄 93): ▪ 4...20 mA NAMUR (3.8...20.5 mA) ▪ 4...20 mA US (3.9...20.8 mA) ▪ 4...20 mA (4... 20.5 mA) ▪ 0...20 mA (0... 20.5 mA)	Enter 4 mA value.	Signed floating-point number	–
20 mA value	One of the following options is selected in the **Current span** parameter (→ 📄 93): ▪ 4...20 mA NAMUR (3.8...20.5 mA) ▪ 4...20 mA US (3.9...20.8 mA) ▪ 4...20 mA (4... 20.5 mA) ▪ 0...20 mA (0... 20.5 mA)	Enter 20 mA value.	Signed floating-point number	Depends on country and nominal diameter

www.nicsanat.com
021-87700210
NIC SANAT
نیک صنعت

Parameter	Prerequisite	Description	Selection / User interface / User entry	Factory setting
Fixed current	The **Fixed current** option is selected in the **Current span** parameter (→ 🗎 93).	Defines the fixed output current.	0 to 22.5 mA	22.5 mA
Damping output 1 to n	A process variable is selected in the **Assign current output** parameter (→ 🗎 93) and one of the following options is selected in the **Current span** parameter (→ 🗎 93): ▪ 4...20 mA NAMUR (3.8...20.5 mA) ▪ 4...20 mA US (3.9...20.8 mA) ▪ 4...20 mA (4... 20.5 mA) ▪ 0...20 mA (0... 20.5 mA)	Set reaction time for output signal to fluctuations in the measured value.	0.0 to 999.9 s	–
Failure mode	A process variable is selected in the **Assign current output** parameter (→ 🗎 93) and one of the following options is selected in the **Current span** parameter (→ 🗎 93): ▪ 4...20 mA NAMUR (3.8...20.5 mA) ▪ 4...20 mA US (3.9...20.8 mA) ▪ 4...20 mA (4... 20.5 mA) ▪ 0...20 mA (0... 20.5 mA)	Define output behavior in alarm condition.	▪ Min. ▪ Max. ▪ Last valid value ▪ Actual value ▪ Defined value	–
Failure current	The **Defined value** option is selected in the **Failure mode** parameter.	Enter current output value in alarm condition.	0 to 22.5 mA	22.5 mA

* Visibility depends on order options or device settings

www.nicsanat.com 021-87700210 NIC SANAT نیک صنعت

9.4.11 Configuring the pulse/frequency/switch output

The **Pulse/frequency/switch output** wizard guides you systematically through all the parameters that can be set for configuring the selected output type.

Navigation
"Setup" menu → Advanced setup → Pulse/frequency/switch output

▶ **Pulse/frequency/switch output 1 to n**		
	Operating mode	→ 📄 95

Parameter overview with brief description

Parameter	Description	Selection
Operating mode	Define the output as a pulse, frequency or switch output.	▪ Pulse ▪ Frequency ▪ Switch

Configuring the pulse output

Navigation
"Setup" menu → Pulse/frequency/switch output

▶ **Pulse/frequency/switch output 1 to n**		
	Operating mode	→ 📄 96
	Terminal number	→ 📄 96
	Signal mode	→ 📄 96
	Assign pulse output	→ 📄 96
	Pulse scaling	→ 📄 96
	Pulse width	→ 📄 96
	Failure mode	→ 📄 96

www.nicsanat.com 021-87700210 NIC SANAT نیک صنعت

Parameter overview with brief description

Parameter	Prerequisite	Description	Selection / User interface / User entry	Factory setting
Operating mode	–	Define the output as a pulse, frequency or switch output.	▪ Pulse ▪ Frequency ▪ Switch	–
Terminal number	–	Shows the terminal numbers used by the PFS output module.	▪ Not used ▪ 24-25 (I/O 2) ▪ 22-23 (I/O 3)	–
Signal mode	–	Select the signal mode for the PFS output.	▪ Passive ▪ Active * ▪ Passive NAMUR	–
Assign pulse output 1 to n	The **Pulse** option is selected in the **Operating mode** parameter.	Select process variable for pulse output.	▪ Off ▪ Mass flow ▪ Corrected volume flow ▪ FAD volume flow * ▪ Volume flow ▪ Energy flow * ▪ Heat flow *	–
Pulse scaling	The **Pulse** option is selected in the **Operating mode** parameter (→ 🗎 95) and a process variable is selected in the **Assign pulse output** parameter (→ 🗎 96).	Enter quantity for measured value at which a pulse is output.	Positive floating point number	Depends on country and nominal diameter
Pulse width	The **Pulse** option is selected in the **Operating mode** parameter (→ 🗎 95) and a process variable is selected in the **Assign pulse output** parameter (→ 🗎 96).	Define time width of the output pulse.	0.05 to 2 000 ms	–
Failure mode	The **Pulse** option is selected in the **Operating mode** parameter (→ 🗎 95) and a process variable is selected in the **Assign pulse output** parameter (→ 🗎 96).	Define output behavior in alarm condition.	▪ Actual value ▪ No pulses	–

* Visibility depends on order options or device settings

Configuring the frequency output

Navigation

"Setup" menu → Pulse/frequency/switch output

▶ **Pulse/frequency/switch output 1 to n**

Operating mode	→ 🗎 97
Terminal number	→ 🗎 97
Signal mode	→ 🗎 97
Assign frequency output	→ 🗎 97

www.nicsanat.com 021-87700210 NIC SANAT نیک صنعت

Minimum frequency value	→ 🗎 97
Maximum frequency value	→ 🗎 98
Measuring value at minimum frequency	→ 🗎 98
Measuring value at maximum frequency	→ 🗎 98
Failure mode	→ 🗎 98
Failure frequency	→ 🗎 98
Invert output signal	→ 🗎 98

Parameter overview with brief description

Parameter	Prerequisite	Description	Selection / User interface / User entry	Factory setting
Operating mode	–	Define the output as a pulse, frequency or switch output.	▪ Pulse ▪ Frequency ▪ Switch	–
Terminal number	–	Shows the terminal numbers used by the PFS output module.	▪ Not used ▪ 24-25 (I/O 2) ▪ 22-23 (I/O 3)	–
Signal mode	–	Select the signal mode for the PFS output.	▪ Passive ▪ Active * ▪ Passive NAMUR	–
Assign frequency output	In the **Operating mode** parameter (→ 🗎 95), the **Frequency** option is selected.	Select process variable for frequency output.	▪ Off ▪ Temperature ▪ Mass flow ▪ Corrected volume flow ▪ FAD volume flow * ▪ Volume flow ▪ Energy flow * ▪ Heat flow * ▪ Density ▪ Flow velocity ▪ Pressure ▪ 2nd temperature delta heat * ▪ Electronic temperature	–
Minimum frequency value	The **Frequency** option is selected in the **Operating mode** parameter (→ 🗎 95) and a process variable is selected in the **Assign frequency output** parameter (→ 🗎 97).	Enter minimum frequency.	0.0 to 10 000.0 Hz	–

www.nicsanat.com
021-87700210
NIC SANAT
نیک صنعت

Parameter	Prerequisite	Description	Selection / User interface / User entry	Factory setting
Maximum frequency value	The **Frequency** option is selected in the **Operating mode** parameter (→ 🗎 95) and a process variable is selected in the **Assign frequency output** parameter (→ 🗎 97).	Enter maximum frequency.	0.0 to 10 000.0 Hz	–
Measuring value at minimum frequency	The **Frequency** option is selected in the **Operating mode** parameter (→ 🗎 95) and a process variable is selected in the **Assign frequency output** parameter (→ 🗎 97).	Enter measured value for minmum frequency.	Signed floating-point number	Depends on country and nominal diameter
Measuring value at maximum frequency	The **Frequency** option is selected in the **Operating mode** parameter (→ 🗎 95) and a process variable is selected in the **Assign frequency output** parameter (→ 🗎 97).	Enter measured value for maximum frequency.	Signed floating-point number	Depends on country and nominal diameter
Failure mode	The **Frequency** option is selected in the **Operating mode** parameter (→ 🗎 95) and a process variable is selected in the **Assign frequency output** parameter (→ 🗎 97).	Define output behavior in alarm condition.	▪ Actual value ▪ Defined value ▪ 0 Hz	–
Failure frequency	In the **Operating mode** parameter (→ 🗎 95), the **Frequency** option is selected, in the **Assign frequency output** parameter (→ 🗎 97) a process variable is selected, and in the **Failure mode** parameter, the **Defined value** option is selected.	Enter frequency output value in alarm condition.	0.0 to 12 500.0 Hz	–
Invert output signal	–	Invert the output signal.	▪ No ▪ Yes	–

* Visibility depends on order options or device settings

www.nicsanat.com 021-87700210 NIC SANAT نیک صنعت

Configuring the switch output

Navigation
"Setup" menu → Pulse/frequency/switch output

▶ Pulse/frequency/switch output 1 to n	
Operating mode	→ 📄 99
Terminal number	→ 📄 99
Signal mode	→ 📄 99
Switch output function	→ 📄 100
Assign diagnostic behavior	→ 📄 100
Assign limit	→ 📄 100
Assign status	→ 📄 100
Switch-on value	→ 📄 100
Switch-off value	→ 📄 100
Switch-on delay	→ 📄 100
Switch-off delay	→ 📄 101
Failure mode	→ 📄 101

Parameter overview with brief description

Parameter	Prerequisite	Description	Selection / User interface / User entry	Factory setting
Operating mode	–	Define the output as a pulse, frequency or switch output.	▪ Pulse ▪ Frequency ▪ Switch	–
Terminal number	–	Shows the terminal numbers used by the PFS output module.	▪ Not used ▪ 24-25 (I/O 2) ▪ 22-23 (I/O 3)	–
Signal mode	–	Select the signal mode for the PFS output.	▪ Passive ▪ Active * ▪ Passive NAMUR	–

www.nicsanat.com 021-87700210 NIC SANAT نیک صنعت

Parameter	Prerequisite	Description	Selection / User interface / User entry	Factory setting
Switch output function	The **Switch** option is selected in the **Operating mode** parameter.	Select function for switch output.	▪ Off ▪ On ▪ Diagnostic behavior ▪ Limit ▪ Flow direction check * ▪ Status	–
Assign diagnostic behavior	▪ In the **Operating mode** parameter, the **Switch** option is selected. ▪ In the **Switch output function** parameter, the **Diagnostic behavior** option is selected.	Select diagnostic behavior for switch output.	▪ Alarm ▪ Alarm or warning ▪ Warning	–
Assign limit	▪ The **Switch** option is selected in the **Operating mode** parameter. ▪ The **Limit** option is selected in the **Switch output function** parameter.	Select process variable for limit function.	▪ Temperature ▪ Mass flow ▪ Corrected volume flow ▪ FAD volume flow * ▪ Volume flow ▪ Energy flow * ▪ Heat flow * ▪ Density ▪ Flow velocity ▪ 2nd temperature delta heat * ▪ Electronic temperature ▪ Totalizer 1 ▪ Totalizer 2 ▪ Totalizer 3	–
Assign status	▪ The **Switch** option is selected in the **Operating mode** parameter. ▪ The **Status** option is selected in the **Switch output function** parameter.	Select device status for switch output.	▪ Off ▪ Low flow cut off	–
Switch-on value	▪ The **Switch** option is selected in the **Operating mode** parameter. ▪ The **Limit** option is selected in the **Switch output function** parameter.	Enter measured value for the switch-on point.	Signed floating-point number	Depends on country and nominal diameter
Switch-off value	▪ The **Switch** option is selected in the **Operating mode** parameter. ▪ The **Limit** option is selected in the **Switch output function** parameter.	Enter measured value for the switch-off point.	Signed floating-point number	–
Switch-on delay	▪ The **Switch** option is selected in the **Operating mode** parameter. ▪ The **Limit** option is selected in the **Switch output function** parameter.	Define delay for the switch-on of status output.	0.0 to 100.0 s	–

www.nicsanat.com 021-87700210 NIC SANAT نیک صنعت

Parameter	Prerequisite	Description	Selection / User interface / User entry	Factory setting
Switch-off delay	▪ The **Switch** option is selected in the **Operating mode** parameter. ▪ The **Limit** option is selected in the **Switch output function** parameter.	Define delay for the switch-off of status output.	0.0 to 100.0 s	–
Failure mode	–	Define output behavior in alarm condition.	▪ Actual status ▪ Open ▪ Closed	–

* Visibility depends on order options or device settings

9.4.12 Configuring the relay output

The **Relay output** wizard guides the user systematically through all the parameters that have to be set for configuring the relay output.

Navigation
"Setup" menu → Relay output 1 to n

▶ Relay output 1 to n	
Terminal number	→ 📄 102
Relay output function	→ 📄 102
Assign limit	→ 📄 102
Assign diagnostic behavior	→ 📄 102
Assign status	→ 📄 102
Switch-off value	→ 📄 102
Switch-off delay	→ 📄 102
Switch-on value	→ 📄 102
Switch-on delay	→ 📄 102
Failure mode	→ 📄 102

www.nicsanat.com 021-87700210 NIC SANAT نیک صنعت

Parameter overview with brief description

Parameter	Prerequisite	Description	User interface / Selection / User entry	Factory setting
Terminal number	–	Shows the terminal numbers used by the relay output module.	▪ Not used ▪ 24-25 (I/O 2) ▪ 22-23 (I/O 3)	–
Relay output function	–	Select the function for the relay output.	▪ Closed ▪ Open ▪ Diagnostic behavior ▪ Limit ▪ Flow direction check ▪ Digital Output	–
Assign limit	The **Limit** option is selected in the **Relay output function** parameter.	Select process variable for limit function.	▪ Temperature ▪ Mass flow ▪ Corrected volume flow ▪ FAD volume flow * ▪ Volume flow ▪ Energy flow * ▪ Heat flow * ▪ Density ▪ Flow velocity ▪ 2nd temperature delta heat * ▪ Electronic temperature ▪ Totalizer 1 ▪ Totalizer 2 ▪ Totalizer 3	–
Assign diagnostic behavior	In the **Relay output function** parameter, the **Diagnostic behavior** option is selected.	Select diagnostic behavior for switch output.	▪ Alarm ▪ Alarm or warning ▪ Warning	–
Assign status	In the **Relay output function** parameter, the **Digital Output** option is selected.	Select device status for switch output.	▪ Off ▪ Low flow cut off	–
Switch-off value	In the **Relay output function** parameter, the **Limit** option is selected.	Enter measured value for the switch-off point.	Signed floating-point number	–
Switch-off delay	In the **Relay output function** parameter, the **Limit** option is selected.	Define delay for the switch-off of status output.	0.0 to 100.0 s	–
Switch-on value	The **Limit** option is selected in the **Relay output function** parameter.	Enter measured value for the switch-on point.	Signed floating-point number	Depends on country and nominal diameter
Switch-on delay	In the **Relay output function** parameter, the **Limit** option is selected.	Define delay for the switch-on of status output.	0.0 to 100.0 s	–
Failure mode	–	Define output behavior in alarm condition.	▪ Actual status ▪ Open ▪ Closed	–

* Visibility depends on order options or device settings

9.4.13 Configuring the local display

The **Display** wizard guides you systematically through all the parameters that can configured for configuring the local display.

www.nicsanat.com
021-87700210
NIC SANAT
نیک صنعت

Navigation
"Setup" menu → Display

▶ Display	
Format display	→ 📄 103
Value 1 display	→ 📄 103
0% bargraph value 1	→ 📄 104
100% bargraph value 1	→ 📄 104
Value 2 display	→ 📄 104
Value 3 display	→ 📄 104
0% bargraph value 3	→ 📄 104
100% bargraph value 3	→ 📄 104
Value 4 display	→ 📄 104

Parameter overview with brief description

Parameter	Prerequisite	Description	Selection / User entry	Factory setting
Format display	A local display is provided.	Select how measured values are shown on the display.	▪ 1 value, max. size ▪ 1 bargraph + 1 value ▪ 2 values ▪ 1 value large + 2 values ▪ 4 values	–
Value 1 display	A local display is provided.	Select the measured value that is shown on the local display.	▪ Temperature ▪ Mass flow ▪ Corrected volume flow ▪ FAD volume flow * ▪ Volume flow ▪ Energy flow * ▪ Heat flow * ▪ Density ▪ Flow velocity ▪ Pressure ▪ 2nd temperature delta heat * ▪ Electronic temperature ▪ Totalizer 1 ▪ Totalizer 2 ▪ Totalizer 3 ▪ Current output 1 * ▪ Current output 2 * ▪ Current output 3 *	–

www.nicsanat.com 021-87700210 NIC SANAT نیک صنعت

Parameter	Prerequisite	Description	Selection / User entry	Factory setting
0% bargraph value 1	A local display is provided.	Enter 0% value for bar graph display.	Signed floating-point number	–
100% bargraph value 1	A local display is provided.	Enter 100% value for bar graph display.	Signed floating-point number	Depends on country and nominal diameter
Value 2 display	A local display is provided.	Select the measured value that is shown on the local display.	For the picklist, see the **Value 1 display** parameter (→ 🗎 103)	–
Value 3 display	A local display is provided.	Select the measured value that is shown on the local display.	For the picklist, see the **Value 1 display** parameter (→ 🗎 103)	–
0% bargraph value 3	A selection was made in the **Value 3 display** parameter.	Enter 0% value for bar graph display.	Signed floating-point number	–
100% bargraph value 3	A selection was made in the **Value 3 display** parameter.	Enter 100% value for bar graph display.	Signed floating-point number	–
Value 4 display	A local display is provided.	Select the measured value that is shown on the local display.	For the picklist, see the **Value 1 display** parameter (→ 🗎 103)	–
Value 5 display	A local display is provided.	Select the measured value that is shown on the local display.	For the picklist, see the **Value 1 display** parameter (→ 🗎 103)	–
Value 6 display	A local display is provided.	Select the measured value that is shown on the local display.	For the picklist, see the **Value 1 display** parameter (→ 🗎 103)	–
Value 7 display	A local display is provided.	Select the measured value that is shown on the local display.	For the picklist, see the **Value 1 display** parameter (→ 🗎 103)	–
Value 8 display	A local display is provided.	Select the measured value that is shown on the local display.	For the picklist, see the **Value 1 display** parameter (→ 🗎 103)	–

* Visibility depends on order options or device settings

www.nicsanat.com 021-87700210 NIC SANAT نیک صنعت

9.4.14 Configuring the low flow cut off

The **Low flow cut off** wizard systematically guides the user through all the parameters that must be set to configure low flow cut off.

Navigation
"Setup" menu → Low flow cut off

▶ **Low flow cut off**		
	Assign process variable	→ 🗎 105
	On value low flow cutoff	→ 🗎 105
	Off value low flow cutoff	→ 🗎 105

Parameter overview with brief description

Parameter	Prerequisite	Description	Selection / User entry	Factory setting
Assign process variable	–	Select process variable for low flow cut off.	▪ Off ▪ Mass flow ▪ Volume flow ▪ Corrected volume flow ▪ FAD volume flow *	–
On value low flow cutoff	A process variable is selected in the **Assign process variable** parameter (→ 🗎 105).	Enter on value for low flow cut off.	Positive floating-point number	Depends on country and nominal diameter
Off value low flow cutoff	A process variable is selected in the **Assign process variable** parameter (→ 🗎 105).	Enter off value for low flow cut off.	0 to 100.0 %	–

* Visibility depends on order options or device settings

www.nicsanat.com 021-87700210 NIC SANAT نیک صنعت

9.5 Advanced settings

The **Advanced setup** submenu with its submenus contains parameters for specific settings.

Navigation to the "Advanced setup" submenu

The number of submenus and parameters can vary depending on the device version. Certain submenus and parameters in these submenus are not described in the Operating Instructions. Instead a description is provided in the Special Documentation for the device ("Supplementary documentation").

Navigation
"Setup" menu → Advanced setup

▶ **Advanced setup**		
	Enter access code	→ 📄 106
	▶ **Totalizer 1 to n**	→ 📄 106
	▶ **Display**	→ 📄 108
	▶ **WLAN settings**	→ 📄 111
	▶ **Configuration backup**	→ 📄 113
	▶ **Administration**	→ 📄 114

9.5.1 Using the parameter to enter the access code

Navigation
"Setup" menu → Advanced setup

Parameter overview with brief description

Parameter	Description	User entry
Enter access code	Enter access code to disable write protection of parameters.	Max. 16-digit character string comprising numbers, letters and special characters

9.5.2 Configuring the totalizer

In the **"Totalizer 1 to n" submenu** the individual totalizer can be configured.

Navigation
"Setup" menu → Advanced setup → Totalizer 1 to n

▶ **Totalizer 1 to n**		
	Assign process variable	→ 📄 107
	Unit totalizer 1 to n	→ 📄 107

www.nicsanat.com 021-87700210 NIC SANAT نیک صنعت

Totalizer operation mode	→ 🗎 107
Failure mode	→ 🗎 107
Assign gas	→ 🗎 107

Parameter overview with brief description

Parameter	Prerequisite	Description	Selection	Factory setting
Assign process variable	–	Select process variable for totalizer.	▪ Off ▪ Mass flow ▪ Corrected volume flow ▪ FAD volume flow * ▪ Volume flow ▪ Energy flow * ▪ Heat flow *	–
Unit totalizer 1 to n	A process variable is selected in the **Assign process variable** parameter (→ 🗎 107) of the **Totalizer 1 to n** submenu.	Select process variable totalizer unit.	Unit choose list	–
Totalizer operation mode	A process variable is selected in the **Assign process variable** parameter (→ 🗎 107) of the **Totalizer 1 to n** submenu.	Select totalizer calculation mode.	▪ Net flow total ▪ Forward flow total ▪ Reverse flow total	–
Failure mode	A process variable is selected in the **Assign process variable** parameter (→ 🗎 107) of the **Totalizer 1 to n** submenu.	Define totalizer behavior in alarm condition.	▪ Stop ▪ Actual value ▪ Last valid value	–
Assign gas (Only with order code for "Application package", option EV "Second gas group")	–	Select the gas that the totalizer uses. This gas is only totalized when it is currently active (‘Active gas’ parameter).	▪ Both gases ▪ Gas ▪ Second gas	▪ **Both gases** option (only with order code for "Application package", option EV "Second gas group") ▪ Gas

* Visibility depends on order options or device settings

www.nicsanat.com
021-87700210
NIC SANAT
نیک صنعت

9.5.3 Carrying out additional display configurations

In the **Display** submenu you can set all the parameters associated with the configuration of the local display.

Navigation
"Setup" menu → Advanced setup → Display

▶ Display	
Format display	→ 📄 109
Value 1 display	→ 📄 109
0% bargraph value 1	→ 📄 109
100% bargraph value 1	→ 📄 109
Decimal places 1	→ 📄 109
Value 2 display	→ 📄 109
Decimal places 2	→ 📄 109
Value 3 display	→ 📄 109
0% bargraph value 3	→ 📄 109
100% bargraph value 3	→ 📄 109
Decimal places 3	→ 📄 110
Value 4 display	→ 📄 110
Decimal places 4	→ 📄 110
Display language	→ 📄 110
Display interval	→ 📄 110
Display damping	→ 📄 110
Header	→ 📄 110
Header text	→ 📄 110
Separator	→ 📄 111
Backlight	→ 📄 111

www.nicsanat.com 021-87700210 NIC SANAT نیک صنعت

Parameter overview with brief description

Parameter	Prerequisite	Description	Selection / User entry	Factory setting
Format display	A local display is provided.	Select how measured values are shown on the display.	▪ 1 value, max. size ▪ 1 bargraph + 1 value ▪ 2 values ▪ 1 value large + 2 values ▪ 4 values	–
Value 1 display	A local display is provided.	Select the measured value that is shown on the local display.	▪ Temperature ▪ Mass flow ▪ Corrected volume flow ▪ FAD volume flow * ▪ Volume flow ▪ Energy flow * ▪ Heat flow * ▪ Density ▪ Flow velocity ▪ Pressure ▪ 2nd temperature delta heat * ▪ Electronic temperature ▪ Totalizer 1 ▪ Totalizer 2 ▪ Totalizer 3 ▪ Current output 1 * ▪ Current output 2 * ▪ Current output 3 *	–
0% bargraph value 1	A local display is provided.	Enter 0% value for bar graph display.	Signed floating-point number	–
100% bargraph value 1	A local display is provided.	Enter 100% value for bar graph display.	Signed floating-point number	Depends on country and nominal diameter
Decimal places 1	A measured value is specified in the **Value 1 display** parameter.	Select the number of decimal places for the display value.	▪ x ▪ x.x ▪ x.xx ▪ x.xxx ▪ x.xxxx	–
Value 2 display	A local display is provided.	Select the measured value that is shown on the local display.	For the picklist, see the **Value 1 display** parameter (→ 🗎 103)	–
Decimal places 2	A measured value is specified in the **Value 2 display** parameter.	Select the number of decimal places for the display value.	▪ x ▪ x.x ▪ x.xx ▪ x.xxx ▪ x.xxxx	–
Value 3 display	A local display is provided.	Select the measured value that is shown on the local display.	For the picklist, see the **Value 1 display** parameter (→ 🗎 103)	–
0% bargraph value 3	A selection was made in the **Value 3 display** parameter.	Enter 0% value for bar graph display.	Signed floating-point number	–
100% bargraph value 3	A selection was made in the **Value 3 display** parameter.	Enter 100% value for bar graph display.	Signed floating-point number	–

www.nicsanat.com 021-87700210 NIC SANAT نیک صنعت

Parameter	Prerequisite	Description	Selection / User entry	Factory setting
Decimal places 3	A measured value is specified in the **Value 3 display** parameter.	Select the number of decimal places for the display value.	▪ x ▪ x.x ▪ x.xx ▪ x.xxx ▪ x.xxxx	–
Value 4 display	A local display is provided.	Select the measured value that is shown on the local display.	For the picklist, see the **Value 1 display** parameter (→ 🗎 103)	–
Decimal places 4	A measured value is specified in the **Value 4 display** parameter.	Select the number of decimal places for the display value.	▪ x ▪ x.x ▪ x.xx ▪ x.xxx ▪ x.xxxx	–
Display language	A local display is provided.	Set display language.	▪ English ▪ Deutsch ▪ Français ▪ Español ▪ Italiano ▪ Nederlands ▪ Portuguesa ▪ Polski ▪ русский язык (Russian) ▪ Svenska ▪ Türkçe ▪ 中文 (Chinese) ▪ 日本語 (Japanese) ▪ 한국어 (Korean) ▪ tiếng Việt (Vietnamese) ▪ čeština (Czech)	English (alternatively, the ordered language is preset in the device)
Display interval	A local display is provided.	Set time measured values are shown on display if display alternates between values.	1 to 10 s	–
Display damping	A local display is provided.	Set display reaction time to fluctuations in the measured value.	0.0 to 999.9 s	–
Header	A local display is provided.	Select header contents on local display.	▪ Device tag ▪ Free text	–
Header text	The **Free text** option is selected in the **Header** parameter.	Enter display header text.	Max. 12 characters, such as letters, numbers or special characters (e.g. @, %, /)	–

www.nicsanat.com 021-87700210 NIC SANAT نیک صنعت

Parameter	Prerequisite	Description	Selection / User entry	Factory setting
Separator	A local display is provided.	Select decimal separator for displaying numerical values.	▪ . (point) ▪ , (comma)	. (point)
Backlight	One of the following conditions is met: ▪ Order code for "Display; operation", option **F** "4-line, illum.; touch control" ▪ Order code for "Display; operation", option **G** "4-line, illum.; touch control +WLAN" ▪ Order code for "Display; operation", option **O** "Remote display 4-line illuminated; 10m/30ft cable; touch control"	Switch the local display backlight on and off.	▪ Disable ▪ Enable	–

* Visibility depends on order options or device settings

9.5.4 WLAN configuration

The **WLAN Settings** submenu guides the user systematically through all the parameters that have to be set for the WLAN configuration.

Navigation
"Setup" menu → Advanced setup → WLAN settings

▶ **WLAN settings**

WLAN	→ 🗎 112
WLAN mode	→ 🗎 112
SSID name	→ 🗎 112
Network security	→ 🗎 112
Security identification	→ 🗎 112
User name	→ 🗎 112
WLAN password	→ 🗎 112
WLAN IP address	→ 🗎 112
WLAN MAC address	→ 🗎 112
WLAN passphrase	→ 🗎 112
Assign SSID name	→ 🗎 112
SSID name	→ 🗎 112

www.nicsanat.com 021-87700210 NIC SANAT نیک صنعت

Connection state	→ 📄 113
Received signal strength	→ 📄 113

Parameter overview with brief description

Parameter	Prerequisite	Description	Selection / User entry / User interface	Factory setting
WLAN	–	Switch WLAN on and off.	▪ Disable ▪ Enable	–
WLAN mode	–	Select WLAN mode.	▪ WLAN access point ▪ WLAN Client	–
SSID name	The client is activated.	Enter the user-defined SSID name (max. 32 characters).	–	–
Network security	–	Select the security type of the WLAN network.	▪ Unsecured ▪ WPA2-PSK ▪ EAP-PEAP with MSCHAPv2 * ▪ EAP-PEAP MSCHAPv2 no server authentic. * ▪ EAP-TLS *	–
Security identification	–	Select security settings and download these settings via menu Data management > Security > WLAN.	▪ Trusted issuer certificate ▪ Device certificate ▪ Device private key	–
User name	–	Enter user name.	–	–
WLAN password	–	Enter WLAN password.	–	–
WLAN IP address	–	Enter IP address of the WLAN interface of the device.	4 octet: 0 to 255 (in the particular octet)	–
WLAN MAC address	–	Enter MAC address of the WLAN interface of the device.	Unique 12-digit character string comprising letters and numbers	Each measuring device is given an individual address.
WLAN passphrase	The **WPA2-PSK** option is selected in the **Security type** parameter.	Enter the network key (8 to 32 characters). ℹ The network key supplied with the device should be changed during commissioning for security reasons.	8 to 32-digit character string comprising numbers, letters and special characters (without spaces)	Serial number of the measuring device (e.g. L100A802000)
Assign SSID name	–	Select which name will be used for SSID: device tag or user-defined name.	▪ Device tag ▪ User-defined	–
SSID name	▪ The **User-defined** option is selected in the **Assign SSID name** parameter. ▪ The **WLAN access point** option is selected in the **WLAN mode** parameter.	Enter the user-defined SSID name (max. 32 characters). ℹ The user-defined SSID name may only be assigned once. If the SSID name is assigned more than once, the devices can interfere with one another.	Max. 32-digit character string comprising numbers, letters and special characters	–

www.nicsanat.com 021-87700210 NIC SANAT نیک صنعت

Parameter	Prerequisite	Description	Selection / User entry / User interface	Factory setting
Connection state	–	Displays the connection status.	▪ Connected ▪ Not connected	–
Received signal strength	–	Shows the received signal strength.	▪ Low ▪ Medium ▪ High	–

* Visibility depends on order options or device settings

9.5.5 Configuration management

After commissioning, you can save the current device configurationor restore the previous device configuration. The device configuration is managed via the **Configuration management** parameter.

Navigation
"Setup" menu → Advanced setup → Configuration backup

▶ Configuration backup	
Operating time	→ 📄 113
Last backup	→ 📄 113
Configuration management	→ 📄 113
Backup state	→ 📄 114
Comparison result	→ 📄 114

Parameter overview with brief description

Parameter	Description	User interface / Selection
Operating time	Indicates how long the device has been in operation.	Days (d), hours (h), minutes (m) and seconds (s)
Last backup	Shows when the last data backup was saved to HistoROM backup.	Days (d), hours (h), minutes (m) and seconds (s)
Configuration management	Select action for managing the device data in the HistoROM backup.	▪ Cancel ▪ Execute backup ▪ Restore * ▪ Compare * ▪ Clear backup data

www.nicsanat.com 021-87700210 NIC SANAT نیک صنعت

Parameter	Description	User interface / Selection
Backup state	Shows the current status of data saving or restoring.	▪ None ▪ Backup in progress ▪ Restoring in progress ▪ Delete in progress ▪ Compare in progress ▪ Restoring failed ▪ Backup failed
Comparison result	Comparison of current device data with HistoROM backup.	▪ Settings identical ▪ Settings not identical ▪ No backup available ▪ Backup settings corrupt ▪ Check not done ▪ Dataset incompatible

* Visibility depends on order options or device settings

Function scope of the "Configuration management" parameter

Options	Description
Cancel	No action is executed and the user exits the parameter.
Execute backup	A backup copy of the current device configuration is saved from the HistoROM backup to the memory of the device. The backup copy includes the transmitter data of the device.
Restore	The last backup copy of the device configuration is restored from the device memory to the device's HistoROM backup. The backup copy includes the transmitter data of the device.
Compare	The device configuration saved in the device memory is compared with the current device configuration of the HistoROM backup.
Clear backup data	The backup copy of the device configuration is deleted from the memory of the device.

HistoROM backup
A HistoROM is a "non-volatile" device memory in the form of an EEPROM.

While this action is in progress, the configuration cannot be edited via the local display and a message on the processing status appears on the display.

9.5.6 Using parameters for device administration

The **Administration** submenu systematically guides the user through all the parameters that can be used for device administration purposes.

Navigation

"Setup" menu → Advanced setup → Administration

▶ **Administration**	
▶ **Define access code**	→ 115
▶ **Reset access code**	→ 115
Device reset	→ 116

www.nicsanat.com
021-87700210
NIC SANAT
نیک صنعت

Using the parameter to define the access code

Navigation
"Setup" menu → Advanced setup → Administration → Define access code

▶ Define access code	
Define access code	→ 🗎 115
Confirm access code	→ 🗎 115

Parameter overview with brief description

Parameter	Description	User entry
Define access code	Restrict write-access to parameters to protect the configuration of the device against unintentional changes.	Max. 16-digit character string comprising numbers, letters and special characters
Confirm access code	Confirm the entered access code.	Max. 16-digit character string comprising numbers, letters and special characters

Using the parameter to reset the access code

Navigation
"Setup" menu → Advanced setup → Administration → Reset access code

▶ Reset access code	
Operating time	→ 🗎 115
Reset access code	→ 🗎 115

Parameter overview with brief description

Parameter	Description	User interface / User entry
Operating time	Indicates how long the device has been in operation.	Days (d), hours (h), minutes (m) and seconds (s)
Reset access code	Reset access code to factory settings. ℹ For a reset code, contact your Endress+Hauser service organization. The reset code can only be entered via: ▪ Web browser ▪ DeviceCare, FieldCare (via CDI-RJ45 service interface) ▪ Fieldbus	Character string comprising numbers, letters and special characters

Using the parameter to reset the device

Navigation
"Setup" menu → Advanced setup → Administration

www.nicsanat.com 021-87700210 NIC SANAT نیک صنعت

Parameter overview with brief description

Parameter	Description	Selection
Device reset	Reset the device configuration - either entirely or in part - to a defined state.	▪ Cancel ▪ To delivery settings ▪ Restart device ▪ Restore S-DAT backup *

* Visibility depends on order options or device settings

9.5.7 In-situ adjustment

In-situ adjustment is used to adjust the flow output by the measuring device to the real flow of the facility. Flow profiles can be distorted by facility parts such as pipe elbows, extensions, reductions or valves. A distorted flow profile can, in turn, negatively impact the accuracy of the measuring device. By taking into consideration the actual process-specific conditions at the facility, including any effects from installation, in-situ adjustment provides flow display that is adapted to the local conditions.

In-situ adjustment can lead to better measurement results in the following cases:

- Process-specific facility conditions / installation effects
  - If the flow profile is distorted
  - For unfavorable inlet and outlet conditions
  - If the gas is unknown
  - If it is not possible to use a flow conditioner to rectify the distorted flow profile
  - If process conditions deviate significantly from reference conditions (pressure and temperature conditions of factory calibration)
- Third-party adjustments with the process gas actually used

In-situ adjustment has the following specific features:

- Can be used for both unidirectional and bidirectional sensors
- Can be defined for up to 16 flow points (for the entire operating range)
- At least one flow point is required for the adjustment but the general principle is that the more flow points that are defined, the better the measuring performance
- Measuring device can be configured without interrupting the process
- The measuring device takes account of the choice of process gas and the actual process conditions during the measurement
- The flow value can be entered manually via a display or an operating interface, or a flow value from a reference device can be read into the measuring device via a current input or bus communication

Prerequisites for optimum in-situ adjustment

- The accuracy of the flow reference used determines the performance of the measuring device adjusted in-situ. For this reason, the use of a reference device with a traceable calibration is recommended
- Calibration points all at the same temperature and pressure conditions
- Compositions of gases or gas mixtures are made available to the measuring device as these compositions are used for pressure and temperature compensation
- Precise pressure specifications are important if a volume flowmeter is used as the reference device
- If the flow values are indicated in corrected volume flow, it is important that the standard reference conditions in the reference device and in the device are identical

- For optimum results, it is advisable to use a reference device with traceable calibration for the adjustment.
- If a reference device is not available, a fan characteristic curve, for example, can act as the referen

www.nicsanat.com 021-87700210 NIC SANAT نیک صنعت

Performing in-situ adjustment

1. Select the gas: Expert → Sensor → Measurement mode → Gas → Gas
   ↳ This entry is important for measuring device pressure and temperature compensation.
2. Activate in-situ adjustment: Expert → Sensor → In-situ adjustment → Activate in-situ adjustment
3. Confirm selection: Yes
   ↳ If an in-situ adjustment already exists, these adjustment points are loaded. An existing adjustment (an entire series of flow points) can be deleted from the measuring device using the "Clear values" function.
4. Select the reference value: Expert → Sensor → In-situ adjustment → Select flow reference
   ↳ If volume flow is selected, it is important that the process pressure entered in the measuring device is as accurate as possible. In the case of corrected volume flow or FAD volume flow, the defined reference operating conditions must match those of the reference measuring device.
5. Select the entry method for the reference value: Expert → Sensor → In-situ adjustment → Input type reference value
   ↳ If "Manual" is selected, the operator must enter the flow value manually via the display (or other operating interface). However, if "Current input" or "External value" (via bus communication) is selected, the current flow values are displayed as read only reference values. The available entry modes depend on the I/O modules available.

The user can first approach the flow points with the facility. As soon as a desired flow value is reached, the value can either be saved by confirming the value or be entered as a fixed value by hand.

The entry method depends on the selected entry mode.

The measured flow value is checked to determine its validity on the basis of the following criteria:

- Average absolute deviation of the flow value
- Standard deviation of the flow value

If a criterion is not met, the value is rejected and the message "Invalid" is displayed. If both criterion are met, the message "Passed" is displayed. If the flow value fluctuates too much, "Unstable" is displayed. If an existing adjustment is "readjusted", and with a maximum of 16 defined flow values, the flow value that is closest to the new adjusted value is replaced. Here, "Replaced" is displayed as the status.

The user can also add a description to the adjustment. Three different text fields, with 16 alphanumeric characters per field, are available for this purpose. It is advisable to use the text fields to identify the adjustment using the name of the gas/gas mixture and the process conditions of the adjustment. If the in-situ adjustment is adjusted by a calibration laboratory with the gas that is actually used by the operator, it is advisable to also include the name of the laboratory, the date of the adjustment and the name of the operator in the description.

Special cases

Individual flow point

A maximum of 16 flow points can be defined. However, in certain situations it may not always be possible to adjust multiple flow points. In such cases, the measuring device can be adjusted with just a few operating points. The minimum number of flow points that are required is one. If only one operating point is adjusted, the measuring device uses default values to replace the missing adjustment values. Therefore, the operator should be aware

www.nicsanat.com 021-87700210 NIC SANAT نیک صنعت

that the accuracy of the in-situ adjustment can suffer when just one flow point is defined if the measured flow is not close to the adjustment value.

Bidirectional flow

Measuring devices that are equipped with the bidirectional option can be adjusted in situ in both flow directions or in just one flow direction, as required. If the measuring device is only adjusted in one direction, it is important that the adjustment is in the positive direction (forward flow) as these adjustment points are automatically replicated to the negative direction (reverse flow).

Unknown gas composition

If the gas or gas mixture is unknown, or if the gas composition cannot be defined by the standard gas selection, the user can define the process gas as "Air". This method has the disadvantage that compensation in the event of variations in the pressure and temperature cannot be guaranteed. If the operator is not sure of the exact composition of the gas but can make an approximate guess, it is recommended to use this approximate gas composition instead of air.

"In-situ adjustment" submenu

Navigation
"Expert" menu → Sensor → In-situ adjustment

▶ In-situ adjustment	
Activate in-situ adjustment (17360)	→ 119
Input type reference value (17351)	→ 119
Delete values (17355)	→ 119
Confirm (17356)	→ 119
Select flow reference (17354)	→ 119
Stability check (17366)	→ 119
Actual flow value (17365)	→ 119
External reference value (17352)	→ 119
Reference value (17353)	→ 119
Apply value (17364)	→ 119
Status (17367)	→ 119
Description 1 (17359)	→ 119
Description 2 (17358)	→ 119

www.nicsanat.com 021-87700210 NIC SANAT نیک صنعت

Description 3 (17357)	→ 119
Description 4 (17002)	→ 119
▶ **Adjustment values in use**	→ 120

Parameter overview with brief description

Parameter	Description	Selection / User interface / User entry	Factory setting
Activate in-situ adjustment	Activate the in-situ adjustment. The points stored by the user are used for the in-situ adjustment.	▪ No ▪ Yes	–
Input type reference value	Select input type for the reference value.	▪ Off ▪ Manual ▪ Current input 1 * ▪ Current input 2 * ▪ Current input 3 * ▪ External value *	–
Delete values	Delete previous adjustment values and descriptions.	▪ No ▪ Yes	–
Confirm	Confirm deletion.	▪ No ▪ Yes	–
Select flow reference	Select process variable. This process variable is used as reference value for the in situ adjustment.	▪ Mass flow ▪ Corrected volume flow ▪ FAD volume flow * ▪ Volume flow	–
Stability check	Activate stability check. New adjustment value is only accepted when the measurement is stable.	▪ No ▪ Yes	–
Actual flow value	Shows the actual flow in relation to the maximum, factory-measured value that is adapted to the actual process conditions.	−2 000 to 2 000 %	–
External reference value	Shows the external reference value for the in situ adjustment.	Signed floating-point number	–
Reference value	Enter fixed value as reference value used for the in situ adjustment.	Signed floating-point number	–
Apply value	Apply the actual value.	▪ No ▪ Yes	–
Status	Shows the validity of the actual reference value.	▪ Passed ▪ Replaced ▪ Unstable ▪ Invalid	–
Description 1	Description for in-situ adjustment: e.g. facility, operator, date.	-	-
Description 2	Description for in-situ adjustment: e.g. facility, operator, date.	-	-
Description 3	Description for in-situ adjustment: e.g. facility, operator, date.	-	-
Description 4	Description for in-situ adjustment: e.g. facility, operator, date.	-	-

* Visibility depends on order options or device settings

www.nicsanat.com
021-87700210
NIC SANAT
نیک صنعت

"Adjustment values in use" submenu

Navigation
"Expert" menu → Sensor → In-situ adjustment → Adjustment values in use

▶ Adjustment values in use	
Gas description 1/2 (17361)	→ 121
Gas description 2/2 (17362)	→ 121
Flow value 1 (17368)	→ 121
Flow value 2 (17369)	→ 121
Flow value 3 (17370)	→ 121
Flow value 4 (17371)	→ 121
Flow value 5 (17372)	→ 121
Flow value 6 (17373)	→ 121
Flow value 7 (17374)	→ 121
Flow value 8 (17375)	→ 121
Flow value 9 (17376)	→ 121
Flow value 10 (17377)	→ 121
Flow value 11 (17378)	→ 121
Flow value 12 (17379)	→ 121
Flow value 13 (17380)	→ 121
Flow value 14 (17381)	→ 121
Flow value 15 (17382)	→ 121
Flow value 16 (17383)	→ 121

www.nicsanat.com 021-87700210 NIC SANAT نیک صنعت

Parameter overview with brief description

Parameter	Description	User interface	Factory setting
Gas description 1/2	Shows the 1st part of the description of the set gas used in the in-situ adjustment.	-	-
Gas description 2/2	Shows the 2nd part of the description of the set gas used in the in-situ adjustment.	-	-
Flow value 1	Shows the stored flow value in relation to the maximum, factory-measured value that is adapted to the actual process conditions.	−2 000 to 2 000 %	–
Flow value 2	Shows the stored flow value in relation to the maximum, factory-measured value that is adapted to the actual process conditions.	−2 000 to 2 000 %	–
Flow value 3	Shows the stored flow value in relation to the maximum, factory-measured value that is adapted to the actual process conditions.	−2 000 to 2 000 %	–
Flow value 4	Shows the stored flow value in relation to the maximum, factory-measured value that is adapted to the actual process conditions.	−2 000 to 2 000 %	–
Flow value 5	Shows the stored flow value in relation to the maximum, factory-measured value that is adapted to the actual process conditions.	−2 000 to 2 000 %	–
Flow value 6	Shows the stored flow value in relation to the maximum, factory-measured value that is adapted to the actual process conditions.	−2 000 to 2 000 %	–
Flow value 7	Shows the stored flow value in relation to the maximum, factory-measured value that is adapted to the actual process conditions.	−2 000 to 2 000 %	–
Flow value 8	Shows the stored flow value in relation to the maximum, factory-measured value that is adapted to the actual process conditions.	−2 000 to 2 000 %	–
Flow value 9	Shows the stored flow value in relation to the maximum, factory-measured value that is adapted to the actual process conditions.	−2 000 to 2 000 %	–
Flow value 10	Shows the stored flow value in relation to the maximum, factory-measured value that is adapted to the actual process conditions.	−2 000 to 2 000 %	–
Flow value 11	Shows the stored flow value in relation to the maximum, factory-measured value that is adapted to the actual process conditions.	−2 000 to 2 000 %	–
Flow value 12	Shows the stored flow value in relation to the maximum, factory-measured value that is adapted to the actual process conditions.	−2 000 to 2 000 %	–
Flow value 13	Shows the stored flow value in relation to the maximum, factory-measured value that is adapted to the actual process conditions.	−2 000 to 2 000 %	–
Flow value 14	Shows the stored flow value in relation to the maximum, factory-measured value that is adapted to the actual process conditions.	−2 000 to 2 000 %	–
Flow value 15	Shows the stored flow value in relation to the maximum, factory-measured value that is adapted to the actual process conditions.	−2 000 to 2 000 %	–
Flow value 16	Shows the stored flow value in relation to the maximum, factory-measured value that is adapted to the actual process conditions.	−2 000 to 2 000 %	–

www.nicsanat.com
021-87700210
NIC SANAT
نیک صنعت

9.6 Configuration management

After commissioning, you can save the current device configurationor restore the previous device configuration. The device configuration is managed via the **Configuration management** parameter.

Navigation
"Setup" menu → Advanced setup → Configuration backup

▶ Configuration backup	
Operating time	→ 📄 113
Last backup	→ 📄 113
Configuration management	→ 📄 113
Backup state	→ 📄 114
Comparison result	→ 📄 114

Parameter overview with brief description

Parameter	Description	User interface / Selection
Operating time	Indicates how long the device has been in operation.	Days (d), hours (h), minutes (m) and seconds (s)
Last backup	Shows when the last data backup was saved to HistoROM backup.	Days (d), hours (h), minutes (m) and seconds (s)
Configuration management	Select action for managing the device data in the HistoROM backup.	▪ Cancel ▪ Execute backup ▪ Restore ▪ Compare ▪ Clear backup data
Backup state	Shows the current status of data saving or restoring.	▪ None ▪ Backup in progress ▪ Restoring in progress ▪ Delete in progress ▪ Compare in progress ▪ Restoring failed ▪ Backup failed
Comparison result	Comparison of current device data with HistoROM backup.	▪ Settings identical ▪ Settings not identical ▪ No backup available ▪ Backup settings corrupt ▪ Check not done ▪ Dataset incompatible

9.6.1 Function scope of the "Configuration management" parameter

Options	Description
Cancel	No action is executed and the user exits the parameter.
Execute backup	A backup copy of the current device configuration is saved from the HistoROM backup to the memory of the device. The backup copy includes the transmitter data of the device.

www.nicsanat.com 021-87700210 NIC SANAT نیک صنعت

Options	Description
Restore	The last backup copy of the device configuration is restored from the device memory to the device's HistoROM backup. The backup copy includes the transmitter data of the device.
Compare	The device configuration saved in the device memory is compared with the current device configuration of the HistoROM backup.
Clear backup data	The backup copy of the device configuration is deleted from the memory of the device.

HistoROM backup
A HistoROM is a "non-volatile" device memory in the form of an EEPROM.

While this action is in progress, the configuration cannot be edited via the local display and a message on the processing status appears on the display.

9.7 Simulation

Via the **Simulation** submenu, it is possible to simulate various process variables in the process and the device alarm mode and verify downstream signal chains (switching valves or closed-control loops). The simulation can be performed without a real measurement (no flow of medium through the device).

Navigation
"Diagnostics" menu → Simulation

▶ Simulation	
Assign simulation process variable	→ 124
Process variable value	→ 124
Current input 1 to n simulation	→ 125
Value current input 1 to n	→ 125
Status input simulation 1 to n	→ 125
Input signal level 1 to n	→ 125
Current output 1 to n simulation	→ 124
Value current output 1 to n	→ 124
Frequency output simulation 1 to n	→ 124
Frequency value 1 to n	→ 124
Pulse output simulation 1 to n	→ 124
Pulse value 1 to n	→ 124

www.nicsanat.com 021-87700210 NIC SANAT نیک صنعت

Switch output simulation 1 to n	→ 124
Switch status 1 to n	→ 124
Relay output 1 to n simulation	→ 124
Switch status 1 to n	→ 125
Device alarm simulation	→ 125
Diagnostic event category	→ 125
Diagnostic event simulation	→ 125

Parameter overview with brief description

Parameter	Prerequisite	Description	Selection / User entry
Assign simulation process variable	–	Select a process variable for the simulation process that is activated.	▪ Off ▪ Temperature ▪ Mass flow ▪ Corrected volume flow ▪ FAD volume flow * ▪ Volume flow ▪ Energy flow * ▪ Heat flow * ▪ Density ▪ Flow velocity
Process variable value	A process variable is selected in the **Assign simulation process variable** parameter (→ 124).	Enter the simulation value for the selected process variable.	Depends on the process variable selected
Current output 1 to n simulation	–	Switch the simulation of the current output on and off.	▪ Off ▪ On
Value current output 1 to n	In the **Current output 1 to n simulation** parameter, the **On** option is selected.	Enter the current value for simulation.	3.59 to 22.5 mA
Frequency output simulation 1 to n	In the **Operating mode** parameter, the **Frequency** option is selected.	Switch the simulation of the frequency output on and off.	▪ Off ▪ On
Frequency value 1 to n	In the **Frequency output simulation 1 to n** parameter, the **On** option is selected.	Enter the frequency value for the simulation.	0.0 to 12 500.0 Hz
Pulse output simulation 1 to n	In the **Operating mode** parameter, the **Pulse** option is selected.	Set and switch off the pulse output simulation. ℹ For **Fixed value** option: **Pulse width** parameter (→ 96) defines the pulse width of the pulses output.	▪ Off ▪ Fixed value ▪ Down-counting value
Pulse value 1 to n	In the **Pulse output simulation 1 to n** parameter, the **Down-counting value** option is selected.	Enter the number of pulses for simulation.	0 to 65 535
Switch output simulation 1 to n	In the **Operating mode** parameter, the **Switch** option is selected.	Switch the simulation of the switch output on and off.	▪ Off ▪ On
Switch status 1 to n	–	Select the status of the status output for the simulation.	▪ Open ▪ Closed
Relay output 1 to n simulation	–	Switch simulation of the relay output on and off.	▪ Off ▪ On

www.nicsanat.com 021-87700210 NIC SANAT نیک صنعت

Parameter	Prerequisite	Description	Selection / User entry
Switch status 1 to n	The **On** option is selected in the **Switch output simulation 1 to n** parameter parameter.	Select status of the relay output for the simulation.	▪ Open ▪ Closed
Device alarm simulation	–	Switch the device alarm on and off.	▪ Off ▪ On
Diagnostic event category	–	Select a diagnostic event category.	▪ Sensor ▪ Electronics ▪ Configuration ▪ Process
Diagnostic event simulation	–	Select a diagnostic event to simulate this event.	▪ Off ▪ Diagnostic event picklist (depends on the category selected)
Current input 1 to n simulation	–	Switch simulation of the current input on and off.	▪ Off ▪ On
Value current input 1 to n	In the **Current input 1 to n simulation** parameter, the **On** option is selected.	Enter the current value for simulation.	0 to 22.5 mA
Status input simulation 1 to n	–	Switch simulation of the status input on and off.	▪ Off ▪ On
Input signal level 1 to n	In the **Status input simulation** parameter, the **On** option is selected.	Select the signal level for the simulation of the status input.	▪ High ▪ Low

* Visibility depends on order options or device settings

9.8 Protecting settings from unauthorized access

The following write protection options exist in order to protect the configuration of the measuring device from unintentional modification:
- Protect access to parameters via access code → 🗎 125
- Protect access to local operation via key locking → 🗎 60
- Protect access to measuring device via write protection switch → 🗎 127

9.8.1 Write protection via access code

The effects of the user-specific access code are as follows:
- Via local operation, the parameters for the measuring device configuration are write-protected and their values can no longer be changed.
- Device access is protected via the Web browser, as are the parameters for the measuring device configuration.
- Device access is protected via FieldCare or DeviceCare (via CDI-RJ45 service interface), as are the parameters for the measuring device configuration.

Defining the access code via the local display

1. Navigate to the **Define access code** parameter (→ 🗎 115).
2. Maximum of 16-digit character string comprising numbers, letters and special characters as the access code.

www.nicsanat.com
021-87700210
NIC SANAT
نیک صنعت

3. Enter the access code again in the **Confirm access code** parameter (→ 🗎 115) to confirm.
   ↳ The 🔒 symbol appears in front of all write-protected parameters.

- Disabling parameter write protection via access code → 🗎 59.
- If the access code is lost: Resetting the access code → 🗎 126.
- The user role with which the user is currently logged in is displayed in **Access status** parameter.
  - Navigation path: Operation → Access status
  - User roles and their access rights → 🗎 59

- The device automatically locks the write-protected parameters again if a key is not pressed for 10 minutes in the navigation and editing view.
- The device locks the write-protected parameters automatically after 60 s if the user skips back to the operational display mode from the navigation and editing view.

Parameters which can always be modified via the local display

Certain parameters that do not affect the measurement are excepted from parameter write protection via the local display. Despite the user-specific access code, they can always be modified, even if the other parameters are locked.

	Parameters for configuring the local display	Parameters for configuring the totalizer
	↓	↓
Language	Format display	Control Totalizer
	Contrast display	Preset value
	Display interval	Reset all totalizers

Defining the access code via the web browser

1. Navigate to the **Define access code** parameter (→ 🗎 115).
2. Define a 16-digit (max.) numeric code as the access code.
3. Enter the access code again in the **Confirm access code** parameter (→ 🗎 115) to confirm.
   ↳ The web browser switches to the login page.

- Disabling parameter write protection via access code → 🗎 59.
- If the access code is lost: Resetting the access code → 🗎 126.
- The user role with which the user is currently logged in is displayed in the **Access status** parameter.
  - Navigation path: Operation → Access status
  - User roles and their access rights → 🗎 59

If no action is performed for 10 minutes, the web browser automatically returns to the login page.

Resetting the access code

If you misplace the user-specific access code, it is possible to reset the code to the factory setting. A reset code must be entered for this purpose. The user-specific access code can then be defined again afterwards.

www.nicsanat.com 021-87700210 NIC SANAT نیک صنعت

Via Web browser, FieldCare, DeviceCare (via CDI-RJ45 service interface), fieldbus

You can only obtain a reset code from your local Endress+Hauser service organization. The code must be calculated explicitly for every device.

1. Note down the serial number of the device.
2. Read off the **Operating time** parameter.
3. Contact the local Endress+Hauser service organization and tell them the serial number and the operating time.
   ↳ Get the calculated reset code.
4. Enter the reset code in the **Reset access code** parameter (→ 115).
   ↳ The access code has been reset to the factory setting **0000**. It can be redefined → 125.

For IT security reasons, the calculated reset code is only valid for 96 hours from the specified operating time and for the specific serial number. If you cannot return to the device within 96 hours, you should either increase the operating time you read out by a few days or switch off the device.

9.8.2 Write protection via write protection switch

Unlike parameter write protection via a user-specific access code, this allows the user to lock write access to the entire operating menu - apart from the **"Contrast display" parameter**.

The parameter values are now read only and cannot be edited any more (exception **"Contrast display" parameter**):
- Via local display
- Via MODBUS RS485 protocol

1. 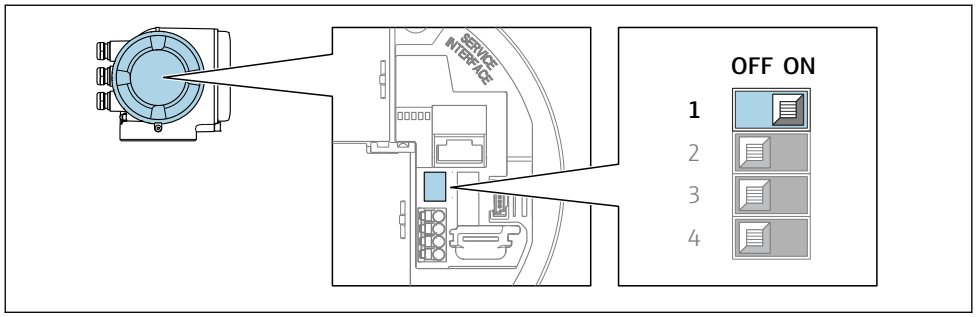

A0029630

   Setting the write protection (WP) switch on the main electronics module to the **ON** position enables hardware write protection.
   ↳ In the **Locking status** parameter, the **Hardware locked** option is displayed → 129. In addition, on the local display the symbol appears in front of the parameters in the header of the operational display and in the navigation view.

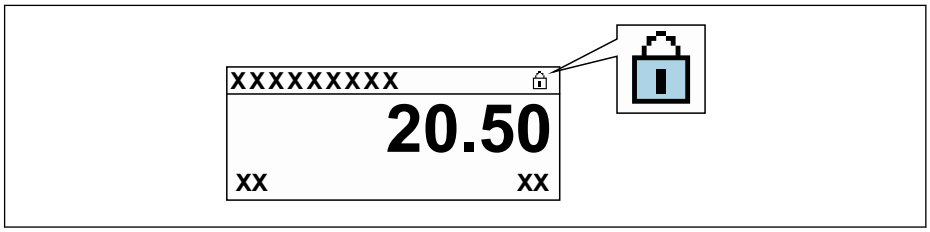

A0029425

www.nicsanat.com
021-87700210
NIC SANAT
نیک صنعت

2. Setting the write protection (WP) switch on the main electronics module to the **OFF** position (factory setting) disables hardware write protection.
   ↳ No option is displayed in the **Locking status** parameter → 🗎 129. On the local display, the 🔒 symbol disappears from in front of the parameters in the header of the operational display and in the navigation view.

www.nicsanat.com
021-87700210
NIC SANAT
نیک صنعت

10 Operation

10.1 Reading off the device locking status

Device active write protection: **Locking status** parameter

Operation → Locking status

Function scope of the "Locking status" parameter

Options	Description
None	The access authorization displayed in the **Access status** parameter applies → 🗎 59. Only appears on local display.
Hardware locked	The DIP switch for hardware locking is activated on the PCB board. This locks write access to the parameters (e.g. via local display or operating tool) → 🗎 127.
Temporarily locked	Write access to the parameters is temporarily locked on account of internal processes running in the device (e.g. data upload/download, reset, etc.). Once the internal processing has been completed, the parameters can be changed once again.

10.2 Adjusting the operating language

Detailed information:
- To configure the operating language → 🗎 78
- For information on the operating languages supported by the measuring device → 🗎 187

10.3 Configuring the display

Detailed information:
- On the basic settings for the local display → 🗎 102
- On the advanced settings for the local display → 🗎 108

10.4 Reading off measured values

With the **Measured values** submenu, it is possible to read all the measured values.

Navigation
"Diagnostics" menu → Measured values

▶ **Measured values**	
▶ **Process variables**	→ 🗎 130
▶ **System values**	→ 🗎 131
▶ **Input values**	→ 🗎 132
▶ **Output values**	→ 🗎 133
▶ **Totalizer**	→ 🗎 131

www.nicsanat.com
021-87700210
NIC SANAT
نیک صنعت

10.4.1 Process variables

The **Process variables** submenu contains all the parameters needed to display the current measured values for each process variable.

Navigation
"Diagnostics" menu → Measured values → Process variables

▶ Process variables	
Mass flow	→ 130
Corrected volume flow	→ 130
Volume flow	→ 130
FAD volume flow	→ 130
Energy flow	→ 131
Temperature	→ 131
Density	→ 131
Flow velocity	→ 131
Heat flow	→ 131

Parameter overview with brief description

Parameter	Prerequisite	Description	User interface
Mass flow	–	Displays the mass flow that is currently measured. *Dependency* The unit is taken from: **Mass flow unit** parameter (→ 87)	Signed floating-point number
Corrected volume flow	–	Displays the corrected volume flow that is currently calculated. *Dependency* The unit is taken from the **Corrected volume flow unit** parameter (→ 87).	Signed floating-point number
Volume flow	–	Displays the volume flow that is currently measured. *Dependency* The unit is taken from the **Volume flow unit** parameter (→ 87).	Signed floating-point number
FAD volume flow	The **Air or compressed air** option is selected in the **Measurement application** parameter.	Displays the FAD volume flow that is currently calculated. *Dependency* The unit is taken from: **FAD volume flow unit** parameter (→ 87)	Signed floating-point number

www.nicsanat.com 021-87700210 NIC SANAT نیک صنعت

Parameter	Prerequisite	Description	User interface
Energy flow	The **Energy** option is selected in the **Measurement application** parameter.	Shows the energy flow currently calculated.	Signed floating-point number
Temperature	–	Displays the temperature that is currently measured. *Dependency* The unit is taken from: **Temperature unit** parameter (→ 🗎 88)	Signed floating-point number
Density	–	Shows the density currently calculated.	Signed floating-point number
Flow velocity	–	Shows the flow velocity currently calculated.	Signed floating-point number
Heat flow	The **Energy** option is selected in the **Measurement application** parameter.	Shows the heat flow currently calculated.	Signed floating-point number

10.4.2 System values

The **System values** submenu contains all the parameters needed to display the current measured values for every system value.

Navigation

"Diagnostics" menu → Measured values → System values

▶ **System values**	
Electronic temperature	→ 🗎 131

Parameter overview with brief description

Parameter	Description	User interface
Electronic temperature	Indication of the current temperature of the electronics.	Signed floating-point number

10.4.3 "Totalizer" submenu

The **Totalizer** submenu contains all the parameters needed to display the current measured values for every totalizer.

Navigation

"Diagnostics" menu → Measured values → Totalizer

▶ **Totalizer**	
Totalizer value 1 to n	→ 🗎 132
Totalizer overflow 1 to n	→ 🗎 132

www.nicsanat.com
021-87700210
NIC SANAT
نیک صنعت

Parameter overview with brief description

Parameter	Description	User interface
Totalizer value 1 to n	Displays the current totalizer counter value.	Signed floating-point number
Totalizer overflow 1 to n	Displays the current totalizer overflow.	Integer with sign

10.4.4 "Input values" submenu

The **Input values** submenu guides you systematically to the individual input values.

Navigation

"Diagnostics" menu → Measured values → Input values

▶ **Input values**		
	▶ **Current input 1 to n**	→ 📄 132
	▶ **Status input 1 to n**	→ 📄 132

Input values of current input

The **Current input 1 to n** submenu contains all the parameters needed to display the current measured values for every current input.

Navigation

"Diagnostics" menu → Measured values → Input values → Current input 1 to n

▶ **Current input 1 to n**		
	Measured values 1 to n	→ 📄 132
	Measured current 1 to n	→ 📄 132

Parameter overview with brief description

Parameter	Description	User interface
Measured values 1 to n	Displays the current input value.	Signed floating-point number
Measured current 1 to n	Displays the current value of the current input.	0 to 22.5 mA

Input values of status input

The **Status input 1 to n** submenu contains all the parameters needed to display the current measured values for every status input.

www.nicsanat.com
021-87700210
NIC SANAT
نیک صنعت

Navigation
"Diagnostics" menu → Measured values → Input values → Status input 1 to n

▶ **Status input 1 to n**		
	Value status input	→ 📄 133

Parameter overview with brief description

Parameter	Description	User interface
Value status input	Shows the current input signal level.	▪ High ▪ Low

10.4.5 Output values

The **Output values** submenu contains all the parameters needed to display the current measured values for every output.

Navigation
"Diagnostics" menu → Measured values → Output values

▶ **Output values**		
	▶ **Current output 1 to n**	→ 📄 133
	▶ **Pulse/frequency/switch output 1 to n**	→ 📄 134
	▶ **Relay output 1 to n**	→ 📄 134

Output values of current output

The **Value current output** submenu contains all the parameters needed to display the current measured values for every current output.

Navigation
"Diagnostics" menu → Measured values → Output values → Value current output 1 to n

▶ **Current output 1 to n**		
	Output current 1 to n	→ 📄 134
	Measured current 1 to n	→ 📄 134

www.nicsanat.com 021-87700210 NIC SANAT نیک صنعت

Parameter overview with brief description

Parameter	Description	User interface
Output current 1	Displays the current value currently calculated for the current output.	3.59 to 22.5 mA
Measured current	Displays the current value currently measured for the current output.	0 to 30 mA

Output values for pulse/frequency/switch output

The **Pulse/frequency/switch output 1 to n** submenu contains all the parameters needed to display the current measured values for every pulse/frequency/switch output.

Navigation

"Diagnostics" menu → Measured values → Output values → Pulse/frequency/switch output 1 to n

▶ **Pulse/frequency/switch output 1 to n**

Output frequency 1 to n	→ 📄 134
Pulse output 1 to n	→ 📄 134
Switch status 1 to n	→ 📄 134

Parameter overview with brief description

Parameter	Prerequisite	Description	User interface
Output frequency 1 to n	In the **Operating mode** parameter, the **Frequency** option is selected.	Displays the value currently measured for the frequency output.	0.0 to 12 500.0 Hz
Pulse output 1 to n	The **Pulse** option is selected in the **Operating mode** parameter parameter.	Displays the pulse frequency currently output.	Positive floating-point number
Switch status 1 to n	The **Switch** option is selected in the **Operating mode** parameter.	Displays the current switch output status.	▪ Open ▪ Closed

Output values for relay output

The **Relay output 1 to n** submenu contains all the parameters needed to display the current measured values for every relay output.

Navigation

"Diagnostics" menu → Measured values → Output values → Relay output 1 to n

▶ **Relay output 1 to n**

Switch status	→ 📄 135
Switch cycles	→ 📄 135
Max. switch cycles number	→ 📄 135

www.nicsanat.com
021-87700210
NIC SANAT
نیک صنعت

Parameter overview with brief description

Parameter	Description	User interface
Switch status	Shows the current relay switch status.	▪ Open ▪ Closed
Switch cycles	Shows number of all performed switch cycles.	Positive integer
Max. switch cycles number	Shows the maximal number of guaranteed switch cycles.	Positive integer

10.5 Adapting the measuring device to the process conditions

The following are available for this purpose:
- Basic settings using the**Setup** menu (→ 🗎 79)
- Advanced settings using the**Advanced setup** submenu (→ 🗎 106)

10.6 Performing a totalizer reset

The totalizers are reset in the **Operation** submenu:
- Control Totalizer
- Reset all totalizers

Navigation
"Operation" menu → Totalizer handling

▶ Totalizer handling	
Control Totalizer 1 to n	→ 🗎 135
Preset value 1 to n	→ 🗎 135
Totalizer value 1 to n	→ 🗎 136
Reset all totalizers	→ 🗎 136

Parameter overview with brief description

Parameter	Prerequisite	Description	Selection / User entry / User interface
Control Totalizer 1 to n	A process variable is selected in the **Assign process variable** parameter (→ 🗎 107) of the **Totalizer 1 to n** submenu.	Control totalizer value.	▪ Totalize ▪ Reset + hold ▪ Preset + hold ▪ Reset + totalize ▪ Preset + totalize ▪ Hold
Preset value 1 to n	A process variable is selected in the **Assign process variable** parameter (→ 🗎 107) of the **Totalizer 1 to n** submenu.	Specify start value for totalizer. *Dependency* ℹ The unit of the selected process variable is defined in the **Unit totalizer** parameter (→ 🗎 107) for the totalizer.	Signed floating-point number

www.nicsanat.com 021-87700210 NIC SANAT نیک صنعت

Parameter	Prerequisite	Description	Selection / User entry / User interface
Totalizer value	–	Displays the current totalizer counter value.	Signed floating-point number
Reset all totalizers	–	Reset all totalizers to 0 and start.	▪ Cancel ▪ Reset + totalize

10.6.1 Function scope of "Control Totalizer" parameter

Options	Description
Totalize	The totalizer is started or continues running.
Reset + hold	The totaling process is stopped and the totalizer is reset to 0.
Preset + hold [1]	The totaling process is stopped and the totalizer is set to its defined start value from the **Preset value** parameter.
Reset + totalize	The totalizer is reset to 0 and the totaling process is restarted.
Preset + totalize [1]	The totalizer is set to the defined start value in the **Preset value** parameter and the totaling process is restarted.
Hold	Totalizing is stopped.

1) Visible depending on the order options or device settings

10.6.2 Function range of "Reset all totalizers" parameter

Options	Description
Cancel	No action is executed and the user exits the parameter.
Reset + totalize	Resets all totalizers to 0 and restarts the totaling process. This deletes all the previously aggregated flow values.

10.7 Displaying data logging

The **Extended HistoROM** application package must be enabled in the device (order option) for the **Data logging** submenu to appear. This contains all the parameters for the measured value history.

Data logging is also available via:
- Plant Asset Management Tool FieldCare → 📄 69.
- Web browser

Function range
- A total of 1000 measured values can be stored
- 4 logging channels
- Adjustable logging interval for data logging
- Display of the measured value trend for each logging channel in the form of a chart

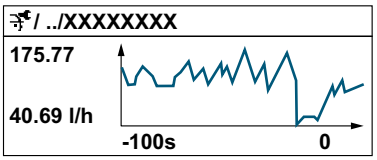

A0034352

www.nicsanat.com 021-87700210 NIC SANAT نیک صنعت

- x-axis: depending on the number of channels selected displays 250 to 1000 measured values of a process variable.
- y-axis: displays the approximate measured value span and constantly adapts this to the ongoing measurement.

If the length of the logging interval or the assignment of the process variables to the channels is changed, the content of the data logging is deleted.

Navigation
"Diagnostics" menu → Data logging

▶ **Data logging**	
Assign channel 1	→ 138
Assign channel 2	→ 138
Assign channel 3	→ 138
Assign channel 4	→ 138
Logging interval	→ 138
Clear logging data	→ 138
Data logging	→ 138
Logging delay	→ 138
Data logging control	→ 138
Data logging status	→ 138
Entire logging duration	→ 138
▶ **Display channel 1**	
▶ **Display channel 2**	
▶ **Display channel 3**	
▶ **Display channel 4**	

www.nicsanat.com 021-87700210 NIC SANAT نیک صنعت

Parameter overview with brief description

Parameter	Prerequisite	Description	Selection / User entry / User interface
Assign channel 1	The **Extended HistoROM** application package is available.	Assign process variable to logging channel.	▪ Off ▪ Temperature ▪ Mass flow ▪ Corrected volume flow ▪ FAD volume flow * ▪ Volume flow ▪ Energy flow ▪ Heat flow * ▪ Density ▪ Flow velocity ▪ Pressure ▪ 2nd temperature delta heat * ▪ Electronic temperature ▪ Current output 1 * ▪ Current output 2 * ▪ Current output 3 * ▪ Current output 4 *
Assign channel 2	The **Extended HistoROM** application package is available. The software options currently enabled are displayed in the **Software option overview** parameter.	Assign a process variable to logging channel.	For the picklist, see the **Assign channel 1** parameter (→ 138)
Assign channel 3	The **Extended HistoROM** application package is available. The software options currently enabled are displayed in the **Software option overview** parameter.	Assign a process variable to logging channel.	For the picklist, see the **Assign channel 1** parameter (→ 138)
Assign channel 4	The **Extended HistoROM** application package is available. The software options currently enabled are displayed in the **Software option overview** parameter.	Assign a process variable to logging channel.	For the picklist, see the **Assign channel 1** parameter (→ 138)
Logging interval	The **Extended HistoROM** application package is available.	Define the logging interval for data logging. This value defines the time interval between the individual data points in the memory.	0.1 to 3 600.0 s
Clear logging data	The **Extended HistoROM** application package is available.	Clear the entire logging data.	▪ Cancel ▪ Clear data
Data logging	–	Select the type of data logging.	▪ Overwriting ▪ Not overwriting
Logging delay	In the **Data logging** parameter, the **Not overwriting** option is selected.	Enter the time delay for measured value logging.	0 to 999 h
Data logging control	In the **Data logging** parameter, the **Not overwriting** option is selected.	Start and stop measured value logging.	▪ None ▪ Delete + start ▪ Stop
Data logging status	In the **Data logging** parameter, the **Not overwriting** option is selected.	Displays the measured value logging status.	▪ Done ▪ Delay active ▪ Active ▪ Stopped
Entire logging duration	In the **Data logging** parameter, the **Not overwriting** option is selected.	Displays the total logging duration.	Positive floating-point number

* Visibility depends on order options or device settings

www.nicsanat.com 021-87700210 NIC SANAT نیک صنعت

11 Diagnostics and troubleshooting

11.1 General troubleshooting

For local display

Error	Possible causes	Remedial action
Local display is dark, but signal output is within the valid range	The cable of the display module is not plugged in correctly.	Insert the plug correctly into the main electronics module and display module.
Local display dark and no output signals	Supply voltage does not match the voltage specified on the nameplate.	Apply the correct supply voltage → 🗎 37.
Local display dark and no output signals	Supply voltage has incorrect polarity.	Reverse polarity of supply voltage.
Local display dark and no output signals	No contact between connecting cables and terminals.	Ensure electrical contact between the cable and the terminal.
Local display dark and no output signals	▪ Terminals are not plugged into the I/O electronics module correctly. ▪ Terminals are not plugged into the main electronics module correctly.	Check terminals.
Local display dark and no output signals	▪ I/O electronics module is defective. ▪ Main electronics module is defective.	Order spare part → 🗎 159.
Local display cannot be read, but signal output is within the valid range	Display is set too bright or too dark.	▪ Set the display brighter by simultaneously pressing ⊞ + Ⓔ. ▪ Set the display darker by simultaneously pressing ⊟ + Ⓔ.
Local display is dark, but signal output is within the valid range	Display module is defective.	Order spare part → 🗎 159.
Backlighting of local display is red	Diagnostic event with "Alarm" diagnostic behavior has occurred.	Take remedial measures → 🗎 148
Text on local display appears in a language that cannot be understood.	The selected operating language cannot be understood.	1. Press ⊟ + ⊞ for 2 s ("home position"). 2. Press Ⓔ. 3. Configure the required language in the **Display language** parameter (→ 🗎 110).
Message on local display: "Communication Error" "Check Electronics"	Communication between the display module and the electronics is interrupted.	▪ Check the cable and the connector between the main electronics module and display module. ▪ Order spare part → 🗎 159.

For output signals

Error	Possible causes	Remedial action
Signal output outside the valid range	Main electronics module is defective.	Order spare part → 🗎 159.
Device shows correct value on local display, but signal output is incorrect, though in the valid range.	Parameter configuration error	Check and adjust parameter configuration.
Device measures incorrectly.	Configuration error or device is operated outside the application.	1. Check and correct parameter configuration. 2. Observe limit values specified in the "Technical Data".

www.nicsanat.com
021-87700210
NIC SANAT
نیک صنعت

For access

Error	Possible causes	Remedial action
No write access to parameters.	Hardware write protection is enabled.	Set the write protection switch on the main electronics module to the **OFF** position → 🗎 127.
No write access to parameters.	Current user role has limited access authorization.	1. Check user role → 🗎 59. 2. Enter correct customer-specific access code → 🗎 59.
Connection via Modbus RS485 is not possible.	Modbus RS485 bus cable is connected incorrectly.	Check the terminal assignment → 🗎 36.
Connection via Modbus RS485 is not possible.	Modbus RS485 cable is incorrectly terminated.	Check the terminating resistor → 🗎 44.
Connection via Modbus RS485 is not possible.	Settings for the communication interface are incorrect.	Check the Modbus RS485 configuration → 🗎 88.
Connection to the web server is not possible.	Web server is disabled.	Use the "FieldCare" or "DeviceCare" operating tool to check if the web server of the device is enabled and enable if necessary → 🗎 66.
	The Ethernet interface is incorrectly configured on the PC.	▶ Check the properties of the Internet protocol (TCP/IP) → 🗎 62. ▶ Check the network settings with the IT manager.
Connection to the web server is not possible.	The IP address is incorrectly configured on the PC.	Check the IP address: 192.168.1.212 → 🗎 62
Connection to the web server is not possible.	WLAN access data are incorrect.	▪ Check WLAN network status. ▪ Log on to the device again using WLAN access data. ▪ Check that WLAN is enabled for the device and operating device → 🗎 62.
	WLAN communication is disabled.	–
It is not possible to connect to the web server, FieldCare or DeviceCare.	WLAN network is not available.	▪ Check whether WLAN reception is available: LED on the display module lights up in blue. ▪ Check if the WLAN connection is enabled: LED on display module flashes blue. ▪ Switch on instrument function.
No network connection or unstable network connection.	WLAN network is weak.	▪ Operating device outside of receiving range: Check the network status on the operating device. ▪ To improve network performance, use an external WLAN antenna.
	Parallel WLAN and Ethernet communication.	▪ Check network settings. ▪ Temporarily enable only the WLAN as an interface.
Web browser is frozen and no further operation possible.	Data transfer is active.	Wait until data transfer or current action is finished.
	Connection lost	▶ Check cable connection and power supply. ▶ Refresh web browser and restart if necessary.
The web browser contents are difficult to read or incomplete.	The web browser version used is not the best option.	▶ Use correct web browser version → 🗎 61. ▶ Empty the web browser cache. ▶ Restart the web browser.
	Unsuitable view settings.	Change the font size/display ratio of the web browser.
No contents displayed in the web browser or contents incomplete.	▪ JavaScript is not enabled. ▪ JavaScript cannot be enabled.	▶ Enable JavaScript. ▶ Enter http://XXX.XXX.X.X.XX/servlet/basic.html as the IP address.

www.nicsanat.com 021-87700210 NIC SANAT نیک صنعت

Error	Possible causes	Remedial action
Operation with FieldCare or DeviceCare not possible via CDI-RJ45 service interface (port 8000).	Firewall of the PC or network prevents communication.	Depending on the settings of the firewall used on the PC or in the network, the firewall must be disabled or adjusted for FieldCare/DeviceCare access.
Flashing of firmware with FieldCare or DeviceCare not possible via CDI-RJ45 service interface (port 8000 or TFTP ports).	Firewall of the PC or network prevents communication.	Depending on the settings of the firewall used on the PC or in the network, the firewall must be disabled or adjusted for FieldCare/DeviceCare access.

11.2 Diagnostic information via light emitting diodes

11.2.1 Transmitter

Different LEDs in the transmitter provide information on the device status.

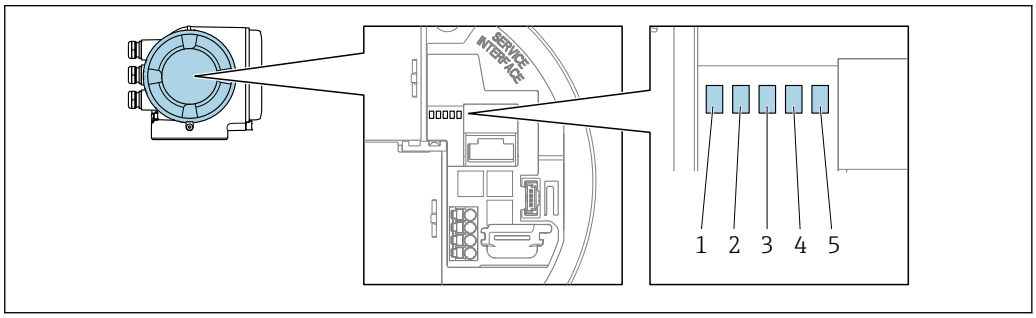

A0029629

1 *Supply voltage*
2 *Device status*
3 *Not used*
4 *Communication*
5 *Service interface (CDI) active*

LED		Color	Meaning
1	Supply voltage	Off	Supply voltage is off or too low.
		Green	Supply voltage is ok.
2	Device status (normal operation)	Off	Firmware error
		Green	Device status is ok.
		Flashing green	Device is not configured.
		Red	A diagnostic event with "Alarm" diagnostic behavior has occurred.
		Flashing red	A diagnostic event with "Warning" diagnostic behavior has occurred.
		Flashing red/green	The device restarts.
2	Device status (during start-up)	Flashes red slowly	If > 30 seconds: problem with the boot loader.
		Flashes red quickly	If > 30 seconds: compatibility problem when reading the firmware.
3	Not used	–	–
4	Communication	Off	Communication not active.
		White	Communication active.
5	Service interface (CDI)	Off	Not connected or no connection established.
		Yellow	Connected and connection established.
		Flashing yellow	Service interface active.

www.nicsanat.com
021-87700210
NIC SANAT
نیک صنعت

11.3 Diagnostic information on local display

11.3.1 Diagnostic message

Faults detected by the self-monitoring system of the measuring device are displayed as a diagnostic message in alternation with the operational display.

Operational display in alarm condition	Diagnostic message

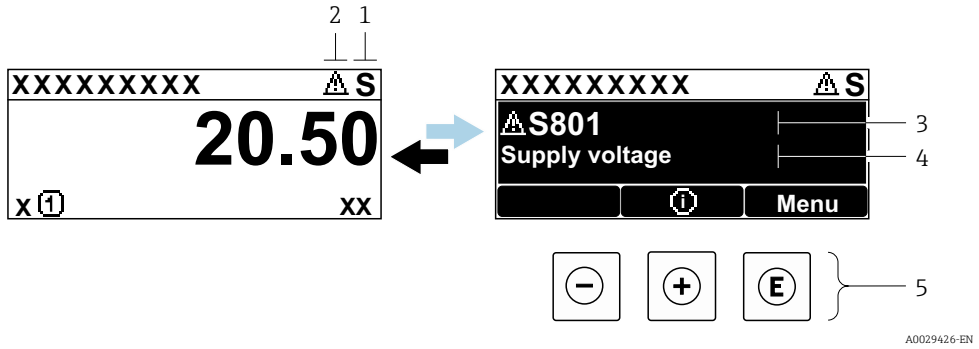

1 *Status signal*
2 *Diagnostic behavior*
3 *Diagnostic behavior with diagnostic code*
4 *Short text*
5 *Operating elements*

If two or more diagnostic events are pending simultaneously, only the message of the diagnostic event with the highest priority is shown.

Other diagnostic events that have occurred can be displayed in the **Diagnostics** menu:
- Via parameter → 📄 151
- Via submenus → 📄 152

Status signals

The status signals provide information on the state and reliability of the device by categorizing the cause of the diagnostic information (diagnostic event).

The status signals are categorized according to VDI/VDE 2650 and NAMUR Recommendation NE 107: F = Failure, C = Function Check, S = Out of Specification, M = Maintenance Required

Symbol	Meaning
F	**Failure** A device error has occurred. The measured value is no longer valid.
C	**Function check** The device is in service mode (e.g. during a simulation).
S	**Out of specification** The device is being operated: Outside its technical specification limits (e.g. outside the process temperature range)
M	**Maintenance required** Maintenance is required. The measured value remains valid.

www.nicsanat.com 021-87700210 NIC SANAT نیک صنعت

Diagnostic behavior

Symbol	Meaning
⊗	**Alarm** ▪ Measurement is interrupted. ▪ Signal outputs and totalizers assume the defined alarm condition. ▪ A diagnostic message is generated.
⚠	**Warning** ▪ Measurement is resumed. ▪ The signal outputs and totalizers are not affected. ▪ A diagnostic message is generated.

Diagnostic information

The fault can be identified using the diagnostic information. The short text helps you by providing information about the fault. In addition, the corresponding symbol for the diagnostic behavior is displayed in front of the diagnostic information on the local display.

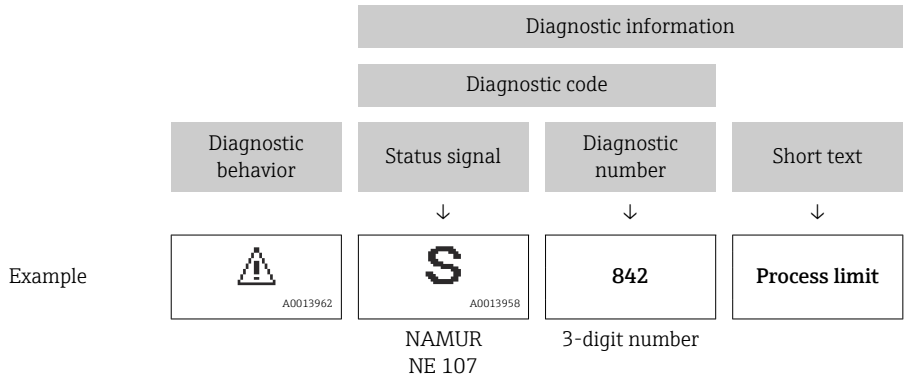

Operating elements

Operating key	Meaning
⊕	**Plus key** *In menu, submenu* Opens the message about the remedial measures.
Ⓔ	**Enter key** *In menu, submenu* Opens the operating menu.

www.nicsanat.com
021-87700210
NIC SANAT
نیک صنعت

11.3.2 Calling up remedial measures

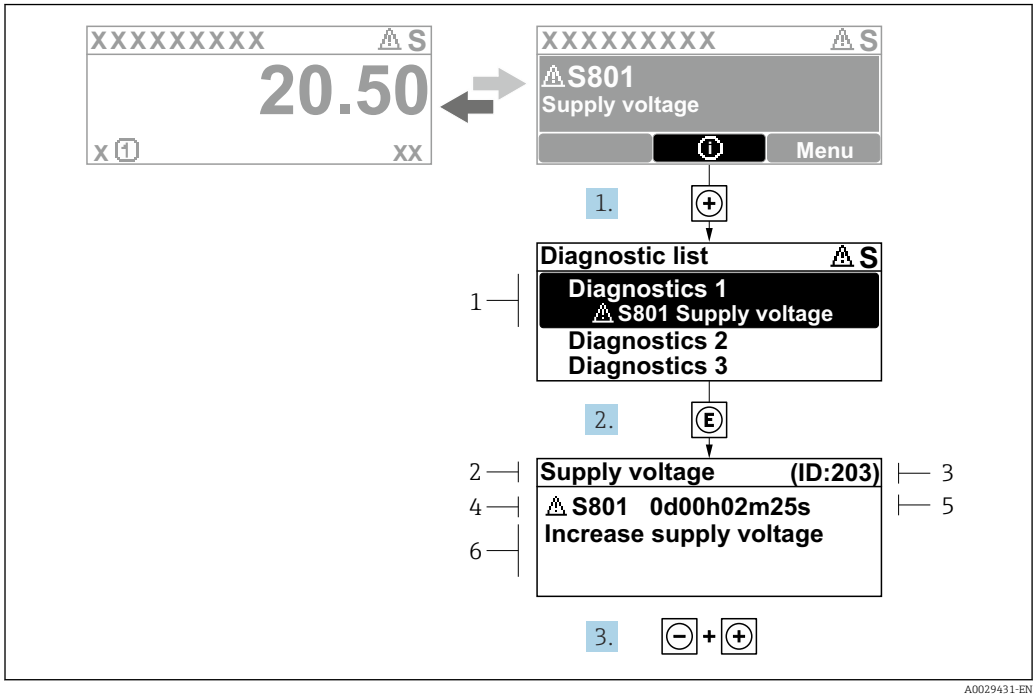

37 *Message for remedial measures*

1 *Diagnostic information*
2 *Short text*
3 *Service ID*
4 *Diagnostic behavior with diagnostic code*
5 *Operation time when error occurred*
6 *Remedial measures*

1. The user is in the diagnostic message.
   Press ⊞ (ⓘ symbol).
   ↳ The **Diagnostic list** submenu opens.
2. Select the desired diagnostic event with ⊞ or ⊟ and press Ⓔ .
   ↳ The message about the remedial measures opens.
3. Press ⊟ + ⊞ simultaneously.
   ↳ The message about the remedial measures closes.

The user is in the **Diagnostics** menu at an entry for a diagnostics event, e.g. in the **Diagnostic list** submenu or **Previous diagnostics** parameter.

1. Press Ⓔ.
   ↳ The message for the remedial measures for the selected diagnostic event opens.
2. Press ⊟ + ⊞ simultaneously.
   ↳ The message for the remedial measures closes.

11.4 Diagnostic information in the web browser

11.4.1 Diagnostic options

Any faults detected by the measuring device are displayed in the Web browser on the home page once the user has logged on.

www.nicsanat.com 021-87700210 NIC SANAT نیک صنعت

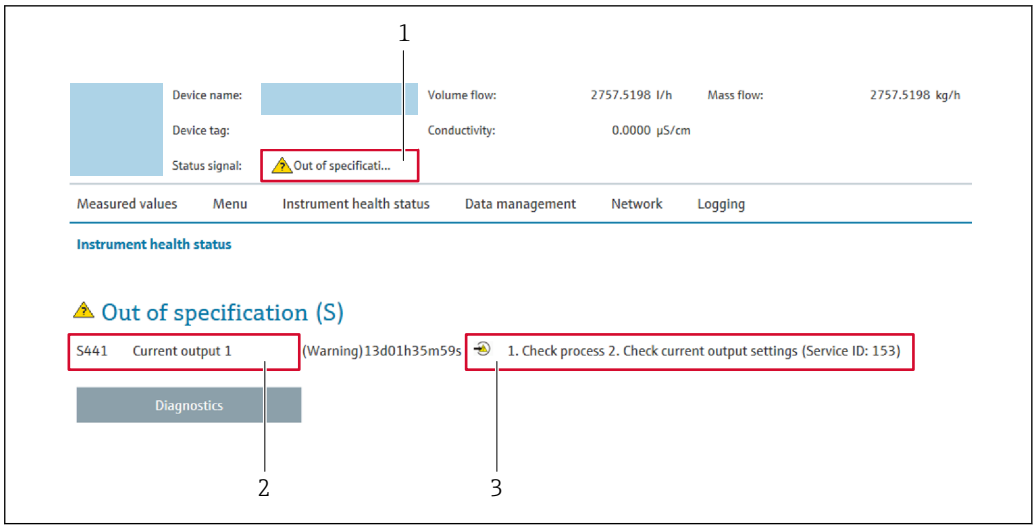

A0031056

1 *Status area with status signal*
2 *Diagnostic information*
3 *Remedial measures with service ID*

In addition, diagnostic events which have occurred can be shown in the **Diagnostics** menu:
- Via parameter → 151
- Via submenu → 152

Status signals

The status signals provide information on the state and reliability of the device by categorizing the cause of the diagnostic information (diagnostic event).

Symbol	Meaning
	Failure A device error has occurred. The measured value is no longer valid.
	Function check The device is in service mode (e.g. during a simulation).
	Out of specification The device is being operated: Outside its technical specification limits (e.g. outside the process temperature range)
	Maintenance required Maintenance is required. The measured value remains valid.

The status signals are categorized in accordance with VDI/VDE 2650 and NAMUR Recommendation NE 107.

11.4.2 Calling up remedy information

Remedy information is provided for every diagnostic event to ensure that problems can be rectified quickly. These measures are displayed in red along with the diagnostic event and the related diagnostic information.

11.5 Diagnostic information in FieldCare or DeviceCare

11.5.1 Diagnostic options

Any faults detected by the measuring device are displayed on the home page of the operating tool once the connection has been established.

www.nicsanat.com
021-87700210
NIC SANAT
نیک صنعت

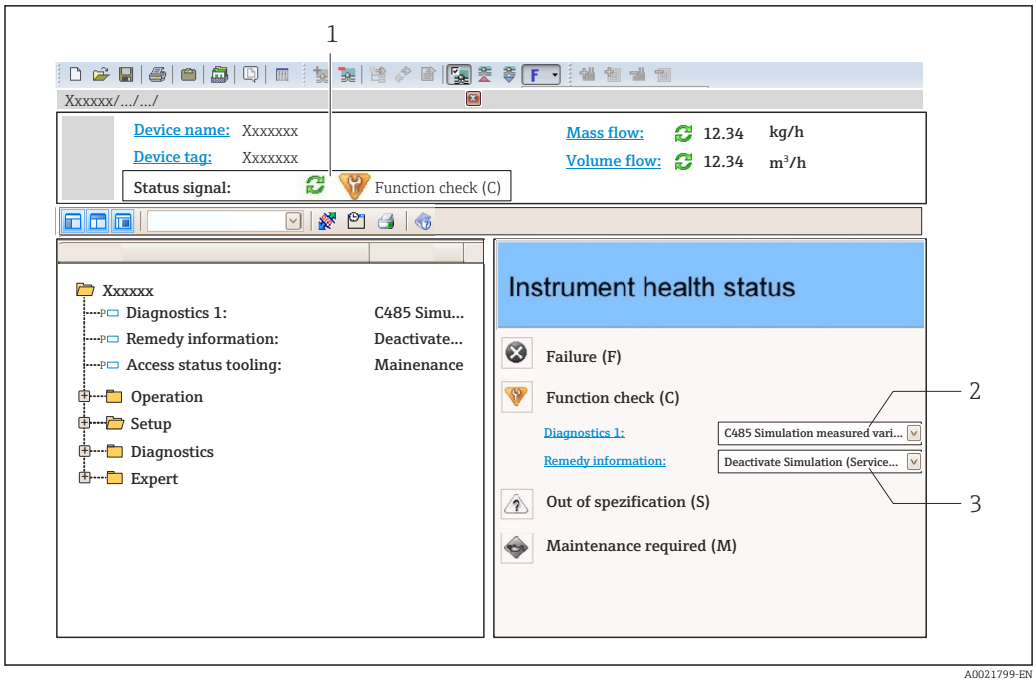

1 *Status area with status signal* → 📄 *142*
2 *Diagnostic information* → 📄 *143*
3 *Remedial measures with service ID*

In addition, diagnostic events which have occurred can be shown in the **Diagnostics** menu:
- Via parameter → 📄 151
- Via submenu → 📄 152

Diagnostic information

The fault can be identified using the diagnostic information. The short text helps you by providing information about the fault. In addition, the corresponding symbol for the diagnostic behavior is displayed in front of the diagnostic information on the local display.

	Diagnostic information			
		Diagnostic code		
	Diagnostic behavior	Status signal	Diagnostic number	Short text
	↓	↓	↓	↓
Example	⚠ A0013962	S A0013958	842	Process limit
		NAMUR NE 107	3-digit number	

11.5.2 Calling up remedy information

Remedy information is provided for every diagnostic event to ensure that problems can be rectified quickly:
- On the home page
  Remedy information is displayed in a separate field below the diagnostics information.
- In the **Diagnostics** menu
  Remedy information can be called up in the working area of the user interface.

www.nicsanat.com 021-87700210 NIC SANAT نیک صنعت

The user is in the **Diagnostics** menu.

1. Call up the desired parameter.
2. On the right in the working area, mouse over the parameter.
   ↳ A tool tip with remedy information for the diagnostic event appears.

11.6 Diagnostic information via communication interface

11.6.1 Reading out diagnostic information

Diagnostic information can be read out via Modbus RS485 register addresses.

- Via register address **6821** (data type = string): diagnosis code, e.g. F270
- Via register address **6859** (data type = integer): diagnosis number, e.g. 270

For an overview of diagnostic events with diagnosis number and diagnosis code → 148

11.6.2 Configuring error response mode

The error response mode for Modbus RS485 communication can be configured in the **Communication** submenu using 2 parameters.

Navigation path
Setup → Communication

Parameter overview with brief description

Parameters	Description	Selection	Factory setting
Failure mode	Select measured value output behavior when a diagnostic message occurs via Modbus communication. The effect of this parameter depends on the option selected in the **Assign diagnostic behavior** parameter.	▪ NaN value ▪ Last valid value NaN ≡ not a number	NaN value

11.7 Adapting the diagnostic information

11.7.1 Adapting the diagnostic behavior

Each item of diagnostic information is assigned a specific diagnostic behavior at the factory. The user can change this assignment for specific diagnostic information in the **Diagnostic behavior** submenu.

Expert → System → Diagnostic handling → Diagnostic behavior

You can assign the following options to the diagnostic number as the diagnostic behavior:

Options	Description
Alarm	The device stops measurement. The measured value output via Modbus RS485 and the totalizers assume the defined alarm condition. A diagnostic message is generated. The background lighting changes to red.
Warning	The device continues to measure. The measured value output via Modbus RS485 and the totalizers are not affected. A diagnostic message is generated.

www.nicsanat.com 021-87700210 NIC SANAT نیک صنعت

Options	Description
Logbook entry only	The device continues to measure. The diagnostic message is only displayed in the **Event logbook** submenu (**Event list** submenu) and is not displayed in alternating sequence with the operational display.
Off	The diagnostic event is ignored, and no diagnostic message is generated or entered.

11.8 Overview of diagnostic information

The amount of diagnostic information and the number of measured variables affected increase if the measuring device has one or more application packages.

In the case of some items of diagnostic information, the diagnostic behavior can be changed. Adapting the diagnostic information → 147

Diagnostic number	Short text	Remedy instructions	Status signal [from the factory]	Diagnostic behavior [from the factory]
Diagnostic of sensor				
004	Sensor error	Change sensor	F	Alarm
082	Data storage	1. Check module connections 2. Change electronic modules	F	Alarm
083	Memory content	1. Restart device 2. Restore HistoROM S-DAT backup ('Device reset' parameter) 3. Replace HistoROM S-DAT	F	Alarm
144	Sensor drift	1. Check sensor 2. Replace sensor	F	Alarm [1)]
Diagnostic of electronic				
201	Device failure	Restart device	F	Alarm
242	Software incompatible	1. Check software 2. Flash or change main electronics module	F	Alarm
252	Modules incompatible	1. Check electronic modules 2. Check if correct modules are available (e.g. NEx, Ex) 3. Replace electronic modules	F	Alarm
252	Modules incompatible	1. Check if correct electronic modul is plugged 2. Replace electronic module	F	Alarm
262	Sensor electronic connection faulty	1. Check or replace connection cable between sensor electronic module (ISEM) and main electronics 2. Check or replace ISEM or main electronics	F	Alarm
270	Main electronic failure	Change main electronic module	F	Alarm
271	Main electronic failure	1. Restart device 2. Change main electronic module	F	Alarm
272	Main electronic failure	Restart device	F	Alarm
273	Main electronic failure	Change electronic	F	Alarm
275	I/O module 1 to n defective	Change I/O module	F	Alarm
276	I/O module 1 to n faulty	1. Restart device 2. Change I/O module	F	Alarm
281	Electronic initialization	Firmware update active, please wait!	F	Alarm

www.nicsanat.com 021-87700210 NIC SANAT نیک صنعت

Diagnostic number	Short text	Remedy instructions	Status signal [from the factory]	Diagnostic behavior [from the factory]
283	Memory content	Reset device	F	Alarm
283	Memory content	Restart device	F	Alarm
302	Device verification in progress	Device verification active, please wait.	C	Warning
303	I/O 1 to n configuration changed	1. Apply I/O module configuration (parameter 'Apply I/O configuration') 2. Afterwards reload device description and check wiring	M	Warning
311	Electronic failure	1. Do not reset device 2. Contact service	M	Warning
332	Writing in HistoROM backup failed	Replace user interface board Ex d/XP: replace transmitter	F	Alarm
361	I/O module 1 to n faulty	1. Restart device 2. Check electronic modules 3. Change I/O Modul or main electronics	F	Alarm
372	Sensor electronic (ISEM) faulty	1. Restart device 2. Check if failure recurs 3. Replace sensor electronic module (ISEM)	F	Alarm
373	Sensor electronic (ISEM) faulty	Transfer data or reset device	F	Alarm
375	I/O- 1 to n communication failed	1. Restart device 2. Check if failure recurs 3. Replace module rack inclusive electronic modules	F	Alarm
378	Supply voltage ISEM faulty	Check supply voltage to the ISEM	F	Alarm
382	Data storage	1. Insert T-DAT 2. Replace T-DAT	F	Alarm
383	Memory content	1. Restart device 2. Delete T-DAT via 'Reset device' parameter 3. Replace T-DAT	F	Alarm
387	HistoROM data faulty	Contact service organization	F	Alarm
Diagnostic of configuration				
330	Flash file invalid	1. Update firmware of device 2. Restart device	M	Warning
331	Firmware update failed	1. Update firmware of device 2. Restart device	F	Warning
410	Data transfer	1. Check connection 2. Retry data transfer	F	Alarm
412	Processing download	Download active, please wait	C	Warning
431	Trim 1 to n	Carry out trim	C	Warning
437	Configuration incompatible	Restart device	F	Alarm
438	Dataset	1. Check data set file 2. Check device configuration 3. Up- and download new configuration	M	Warning

www.nicsanat.com
021-87700210
NIC SANAT
نیک صنعت

Diagnostic number	Short text	Remedy instructions	Status signal [from the factory]	Diagnostic behavior [from the factory]
441	Current output 1 to n	1. Check process 2. Check current output settings	S	Warning [1)]
442	Frequency output 1 to n	1. Check process 2. Check frequency output settings	S	Warning [1)]
442	Frequency output 1 to n		S	Warning
443	Pulse output 1 to n	1. Check process 2. Check pulse output settings	S	Warning [1)]
444	Current input 1 to n	1. Check process 2. Check current input settings	S	Warning [1)]
453	Flow override	Deactivate flow override	C	Warning
484	Failure mode simulation	Deactivate simulation	C	Alarm
485	Measured variable simulation	Deactivate simulation	C	Warning
486	Current input 1 to n simulation	Deactivate simulation	C	Warning
491	Current output 1 to n simulation	Deactivate simulation	C	Warning
492	Simulation frequency output 1 to n	Deactivate simulation frequency output	C	Warning
493	Simulation pulse output 1 to n	Deactivate simulation pulse output	C	Warning
494	Switch output simulation 1 to n	Deactivate simulation switch output	C	Warning
495	Diagnostic event simulation	Deactivate simulation	C	Warning
496	Status input simulation	Deactivate simulation status input	C	Warning
520	I/O 1 to n hardware configuration invalid	1. Check I/O hardware configuration 2. Replace wrong I/O module 3. Plug the module of double pulse output on correct slot	F	Alarm
537	Configuration	1. Check IP addresses in network 2. Change IP address	F	Warning
539	Flow computer configuration incorrect	1. Check input value (pressure, temperature) 2. Check allowed values of the medium properties	S	Alarm
594	Relay output simulation	Deactivate simulation switch output	C	Warning
Diagnostic of process				
803	Current loop	1. Check wiring 2. Change I/O module	F	Alarm
832	Electronic temperature too high	Reduce ambient temperature	S	Warning [1)]
833	Electronic temperature too low	Increase ambient temperature	S	Warning [1)]
834	Process temperature too high	Reduce process temperature	S	Warning [1)]
835	Process temperature too low	Increase process temperature	S	Warning [1)]

www.nicsanat.com
021-87700210
NIC SANAT
نیک صنعت

Diagnostic number	Short text	Remedy instructions	Status signal [from the factory]	Diagnostic behavior [from the factory]
842	Process limit	Low flow cut off active! 1. Check low flow cut off configuration	S	Warning [1]
882	Input signal	1. Check input configuration 2. Check external device or process conditions	F	Alarm
941	Flow velocity too high	1. Check process cond. 2. Increase system pressure	S	Alarm
961	Delta temperature	Check flow rate	S	Alarm
976	Mass flow out of calibrated range	1. Check process cond. 2. Increase system pressure	S	Warning [1]
977	Reverse flow detected	Check flow direction	S	Warning [1]
979	Unstable process conditions	1. Check process cond. 2. Increase system pressure	S	Warning [1]

1) Diagnostic behavior can be changed.

11.9 Pending diagnostic events

The **Diagnostics** menu allows the user to view the current diagnostic event and the previous diagnostic event separately.

To call up the measures to rectify a diagnostic event:
- Via local display → 144
- Via web browser → 145
- Via "FieldCare" operating tool → 146
- Via "DeviceCare" operating tool → 146

Other pending diagnostic events can be displayed in the **Diagnostic list** submenu → 152

Navigation
"Diagnostics" menu

Diagnostics	
Actual diagnostics	→ 152
Previous diagnostics	→ 152
Operating time from restart	→ 152
Operating time	→ 152

www.nicsanat.com 021-87700210 NIC SANAT نیک صنعت

Parameter overview with brief description

Parameter	Prerequisite	Description	User interface
Actual diagnostics	A diagnostic event has occurred.	Shows the current occured diagnostic event along with its diagnostic information. If two or more messages occur simultaneously, the message with the highest priority is shown on the display.	Symbol for diagnostic behavior, diagnostic code and short message.
Previous diagnostics	Two diagnostic events have already occurred.	Shows the diagnostic event that occurred prior to the current diagnostic event along with its diagnostic information.	Symbol for diagnostic behavior, diagnostic code and short message.
Operating time from restart	–	Shows the time the device has been in operation since the last device restart.	Days (d), hours (h), minutes (m) and seconds (s)
Operating time	–	Indicates how long the device has been in operation.	Days (d), hours (h), minutes (m) and seconds (s)

11.10 Diagnostic list

Up to 5 currently pending diagnostic events can be displayed in the **Diagnostic list** submenu along with the associated diagnostic information. If more than 5 diagnostic events are pending, the events with the highest priority are shown on the display.

Navigation path
Diagnostics → Diagnostic list

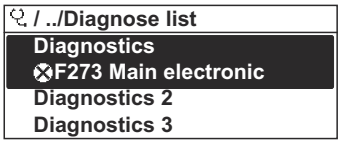

A0014006-EN

38 Taking the example of the local display

To call up the measures to rectify a diagnostic event:
- Via local display → 144
- Via web browser → 145
- Via "FieldCare" operating tool → 146
- Via "DeviceCare" operating tool → 146

11.11 Event logbook

11.11.1 Reading out the event logbook

A chronological overview of the event messages that have occurred is provided in the **Events list** submenu.

Navigation path
Diagnostics menu → **Event logbook** submenu → Event list

www.nicsanat.com 021-87700210 NIC SANAT نیک صنعت

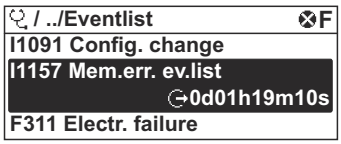

A0014008-EN

39 *Taking the example of the local display*

- A maximum of 20 event messages can be displayed in chronological order.
- If the **Extended HistoROM** application package (order option) is enabled in the device, the event list can contain up to 100 entries .

The event history includes entries for:
- Diagnostic events → 148
- Information events → 153

In addition to the operation time of its occurrence, each event is also assigned a symbol that indicates whether the event has occurred or is ended:
- Diagnostic event
  - ⊖: Occurrence of the event
  - ⊖: End of the event
- Information event
  ⊖: Occurrence of the event

To call up the measures to rectify a diagnostic event:
- Via local display → 144
- Via web browser → 145
- Via "FieldCare" operating tool → 146
- Via "DeviceCare" operating tool → 146

For filtering the displayed event messages → 153

11.11.2 Filtering the event logbook

Using the **Filter options** parameter you can define which category of event message is displayed in the **Events list** submenu.

Navigation path
Diagnostics → Event logbook → Filter options

Filter categories
- All
- Failure (F)
- Function check (C)
- Out of specification (S)
- Maintenance required (M)
- Information (I)

11.11.3 Overview of information events

Unlike a diagnostic event, an information event is displayed in the event logbook only and not in the diagnostic list.

Info number	Info name
I1000	--------(Device ok)
I1079	Sensor changed
I1089	Power on
I1090	Configuration reset
I1091	Configuration changed

www.nicsanat.com 021-87700210 NIC SANAT نیک صنعت

Info number	Info name
I1092	HistoROM backup deleted
I1137	Electronic changed
I1151	History reset
I1155	Reset electronic temperature
I1156	Memory error trend
I1157	Memory error event list
I1221	Zero point adjust failure
I1222	Zero point adjustment ok
I1256	Display: access status changed
I1264	Safety sequence aborted
I1278	I/O module restarted
I1335	Firmware changed
I1361	Web server: login failed
I1397	Fieldbus: access status changed
I1398	CDI: access status changed
I1444	Device verification passed
I1445	Device verification failed
I1457	Measurement error verification failed
I1459	I/O module verification failed
I1461	Sensor verification failed
I1462	Sensor electronic module verific. failed
I1512	Download started
I1513	Download finished
I1514	Upload started
I1515	Upload finished
I1554	Safety sequence started
I1555	Safety sequence confirmed
I1556	Safety mode off
I1618	I/O module 2 replaced
I1619	I/O module 3 replaced
I1621	I/O module 4 replaced
I1622	Calibration changed
I1624	Reset all totalizers
I1625	Write protection activated
I1626	Write protection deactivated
I1627	Web server: login successful
I1628	Display: login successful
I1629	CDI: login successful
I1631	Web server access changed
I1632	Display: login failed
I1633	CDI: login failed
I1634	Reset to factory settings
I1635	Reset to delivery settings

www.nicsanat.com
021-87700210
NIC SANAT
نیک صنعت

Info number	Info name
I1639	Max. switch cycles number reached
I1649	Hardware write protection activated
I1650	Hardware write protection deactivated
I1712	New flash file received
I1725	Sensor electronic module (ISEM) changed
I1726	Configuration backup failed

11.12 Resetting the measuring device

The entire device configuration or some of the configuration can be reset to a defined state with the **Device reset** parameter (→ 🗎 116).

11.12.1 Function range of "Device reset" parameter

Options	Description
Cancel	No action is executed and the user exits the parameter.
To delivery settings	Every parameter for which a customer-specific default setting was ordered is reset to the customer-specific value. All other parameters are reset to the factory setting.
Restart device	The restart resets every parameter with data stored in volatile memory (RAM) to the factory setting (e.g. measured value data). The device configuration remains unchanged.
Restore S-DAT backup	Restores the data that is saved on the S-DAT. Additional information: This function can be used to resolve the memory issue "083 Memory content inconsistent" or to restore the S-DAT data when a new S-DAT has been installed. ℹ This option is displayed only in an alarm condition.

11.13 Device information

The **Device information** submenu contains all parameters that display different information for device identification.

Navigation
"Diagnostics" menu → Device information

▶ **Device information**

Device tag	→ 🗎 156
Serial number	→ 🗎 156
Firmware version	→ 🗎 156
Device name	→ 🗎 156
Order code	→ 🗎 156
Extended order code 1	→ 🗎 156

www.nicsanat.com 021-87700210 NIC SANAT نیک صنعت

Extended order code 2	→ 156
Extended order code 3	→ 156
ENP version	→ 156

Parameter overview with brief description

Parameter	Description	User interface	Factory setting
Device tag	Shows name of measuring point.	Max. 32 characters, such as letters, numbers or special characters (e.g. @, %, /).	–
Serial number	Shows the serial number of the measuring device.	Max. 11-digit character string comprising letters and numbers.	–
Firmware version	Shows the device firmware version installed.	Character string in the format xx.yy.zz	–
Device name	Shows the name of the transmitter. The name can be found on the nameplate of the transmitter.	Character string comprising numbers, letters and special characters	–
Order code	Shows the device order code.	Character string composed of letters, numbers and certain punctuation marks (e.g. /).	–
Extended order code 1	Shows the 1st part of the extended order code.	Character string	–
Extended order code 2	Shows the 2nd part of the extended order code. The extended order code can also be found on the nameplate of the sensor and transmitter in the "Ext. ord. cd." field.	Character string	–
Extended order code 3	Shows the 3rd part of the extended order code. The extended order code can also be found on the nameplate of the sensor and transmitter in the "Ext. ord. cd." field.	Character string	–
ENP version	Shows the version of the electronic nameplate (ENP).	Character string	–

11.14 Firmware history

It is possible to flash the firmware to the current version or the previous version using the service interface.

For the compatibility of the firmware version with the previous version, the installed device description files and operating tools, observe the information about the device in the "Manufacturer's information" document.

The manufacturer's information is available:
- In the Download Area of the Endress+Hauser web site: www.endress.com → Downloads
- Specify the following details:
  - Text search: Manufacturer's information
  - Media type: Documentation – Technical Documentation

www.nicsanat.com
021-87700210
NIC SANAT
نیک صنعت

12 Maintenance

12.1 Maintenance tasks

No special maintenance work is required.

12.1.1 Exterior cleaning

When cleaning the exterior of measuring devices, always use cleaning agents that do not attack the surface of the housing or the seals.

12.1.2 Sensing element cleaning

Cleaning the sensing element

The measuring device can be removed for cleaning.

Use key size 36 mm (1.42 in) to remove the sensor.

⚠ WARNING

Injury from measuring device being ejected!

- ▶ Ensure the system is depressurized before commencing the cleaning work.

NOTICE

Damage to the sensing element!

- ▶ Make sure the sensing elements do not hit against anything.

NOTICE

The use of unsuitable equipment or cleaning liquids can damage the measuring device.

- ▶ Do not use pigs to clean the pipe.
- ▶ Use an oil-free cleaning agent that does not form a film to clean the sensor.

NOTICE

Damage to the sealing surfaces!

- ▶ Make sure the sealing surfaces do not hit against anything.

1. Ensure the system is unpressurized.
2. Release the compression fitting of the measuring device.
3. Carefully remove the measuring device from the process pipe.
4. **NOTICE**

   The protective guard protects the sensing element from damage!

   - ▶ Do not remove the protective guard.

   Gently clean the sensing elements using a soft brush.
5. Carefully insert the measuring device into the process pipe.

   ↳ Make sure the measuring device is aligned correctly→ 📖 16, 📄 29.
6. **For PEEK ferrules:**

   Tighten compression fitting with 1 turn.
7. **For metal ferrules:**

   Tighten compression fitting with a ¼ turn.

ℹ Increase the pressure in the piping system and check for leaks once the desired pressure is reached.

www.nicsanat.com
021-87700210
NIC SANAT
نیک صنعت

12.1.3 Recalibration

The long-term stability of a measuring device depends on the integrity of the sensor, among other things. Impurities can also cause a coating to form on the sensor, which can cause a change in the measuring signal. Therefore, if the sensor is used in applications in which impurities (such as oil residue or dust) can occur, it is advisable to check the sensor for contamination at regular intervals and clean it if necessary (see → 157). The intervals depend on the type, condition and extent of the contamination.

Process conditions such as thermal shocks or constant variations in temperatures can create the conditions in which the measuring signal drifts over time. A recalibration can rectify these undesired changes in the measuring signal and restore the original measuring state.

Determining the recalibration intervals:
- In the event of critical measurements and in order to determine the recalibration intervals, a calibration check should be performed once a year.
  The next recalibration can then be scheduled earlier or later depending on the results of these checks.
- A recalibration every three years is recommended for non-critical applications or for use in clean and dry gases.
- Heartbeat Verification can be used to help determine when a recalibration should be performed. By performing verifications regularly, it is possible to compare the verification results with the initial values determined at the factory. If these values deviate from one another, this can indicate that the device needs to be recalibrated.

12.2 Measuring and test equipment

Endress+Hauser offers a wide variety of measuring and test equipment, such as W@M or device tests.

Your Endress+Hauser Sales Center can provide detailed information on the services.

List of some of the measuring and testing equipment: → 163

12.3 Endress+Hauser services

Endress+Hauser offers a wide variety of services for maintenance such as recalibration, maintenance service or device tests.

Your Endress+Hauser Sales Center can provide detailed information on the services.

www.nicsanat.com 021-87700210 NIC SANAT نیک صنعت

13 Repair

13.1 General information

13.1.1 Repair and conversion concept

The Endress+Hauser repair and conversion concept provides for the following:
- The measuring devices have a modular design.
- Spare parts are grouped into logical kits with the associated Installation Instructions.
- Repairs are carried out by Endress+Hauser Service or by appropriately trained customers.
- Certified devices can only be converted to other certified devices by Endress+Hauser Service or at the factory.

13.1.2 Notes for repair and conversion

For repair and modification of a measuring device, observe the following notes:
- ▶ Use only original Endress+Hauser spare parts.
- ▶ Carry out the repair according to the Installation Instructions.
- ▶ Observe the applicable standards, federal/national regulations, Ex documentation (XA) and certificates.
- ▶ Document every repair and each conversion and enter them into the *W@M* life cycle management database and Netilion Analytics.

13.2 Spare parts

Device Viewer (www.endress.com/deviceviewer):
All the spare parts for the measuring device, along with the order code, are listed here and can be ordered. If available, users can also download the associated Installation Instructions.

Measuring device serial number:
- Is located on the nameplate of the device.
- Can be read out via the **Serial number** parameter (→ 156) in the **Device information** submenu.

13.3 Endress+Hauser services

Endress+Hauser offers a wide range of services.

Your Endress+Hauser Sales Center can provide detailed information on the services.

13.4 Return

The requirements for safe device return can vary depending on the device type and national legislation.

1. Refer to the web page for information:
   http://www.endress.com/support/return-material
   ↳ Select the region.
2. Return the device if repairs or a factory calibration are required, or if the wrong device was ordered or delivered.

www.nicsanat.com
021-87700210
NIC SANAT
نیک صنعت

13.5 Disposal

If required by the Directive 2012/19/EU on waste electrical and electronic equipment (WEEE), the product is marked with the depicted symbol in order to minimize the disposal of WEEE as unsorted municipal waste. Do not dispose of products bearing this marking as unsorted municipal waste. Instead, return them to the manufacturer for disposal under the applicable conditions.

13.5.1 Removing the measuring device

1. Switch off the device.

WARNING

Danger to persons from process conditions!

- Beware of hazardous process conditions such as pressure in the measuring device, high temperatures or aggressive media.

2. Carry out the mounting and connection steps from the "Mounting the measuring device" and "Connecting the measuring device" sections in reverse order. Observe the safety instructions.

13.5.2 Disposing of the measuring device

WARNING

Danger to personnel and environment from fluids that are hazardous to health.

- Ensure that the measuring device and all cavities are free of fluid residues that are hazardous to health or the environment, e.g. substances that have permeated into crevices or diffused through plastic.

Observe the following notes during disposal:

- Observe valid federal/national regulations.
- Ensure proper separation and reuse of the device components.

www.nicsanat.com
021-87700210
NIC SANAT
نیک صنعت

14 Accessories

Various accessories, which can be ordered with the device or subsequently from Endress +Hauser, are available for the device. Detailed information on the order code in question is available from your local Endress+Hauser sales center or on the product page of the Endress+Hauser website: www.endress.com.

14.1 Device-specific accessories

14.1.1 For the transmitter

Accessories	Description
Proline 300 transmitter	Transmitter for replacement or storage. Use the order code to define the following specifications: ▪ Approvals ▪ Output ▪ Input ▪ Display/operation ▪ Housing ▪ Software Order code: 6X3BXX Installation Instructions EA01286D
Remote display and operating module DKX001	▪ If ordered directly with the measuring device: Order code for "Display; operation", option O "Remote display 4-line, illuminated; 10 m (30 ft) cable; touch control" ▪ If ordered separately: ▪ Measuring device: order code for "Display; operation", option M "W/o, prepared for remote display" ▪ DKX001: Via the separate product structure DKX001 ▪ If ordered subsequently: DKX001: Via the separate product structure DKX001 **Mounting bracket for DKX001** ▪ If ordered directly: order code for "Accessory enclosed", option RA "Mounting bracket, pipe 1/2'" ▪ If ordered subsequently: order number: 71340960 **Connecting cable (replacement cable)** Via the separate product structure: DKX002 Further information on display and operating module DKX001→ 187. Special Documentation SD01763D
External WLAN antenna	External WLAN antenna with 1.5 m (59.1 in) connecting cable and two angle brackets. Order code for "Accessory enclosed", option P8 "Wireless antenna wide area". ▪ The external WLAN antenna is not suitable for use in hygienic applications. ▪ Additional information regarding the WLAN interface → 68. Order number: 71351317 Installation Instructions EA01238D
Weather protection cover	Is used to protect the measuring device from the effects of the weather: e.g. rainwater, excess heating from direct sunlight. Order number: 71343505 Installation Instructions EA01160D

www.nicsanat.com
021-87700210
NIC SANAT
نیک صنعت

14.1.2 For the sensor

Accessories	Description
Mounting boss	**Order code for "Accessory enclosed"** ▪ Option PC "Mounting boss, G1'" ▪ Option PD "Mounting boss, 1" NPT" ▪ Option PE "Mounting boss, G¾'" ▪ Option PF "Mounting boss, ¾" NPT" Can be ordered separately: order code DK6MB
Cold tap (ambient pressure)	**Order code for "Accessory enclosed"** ▪ Option PR "Cold tap G1", ambient pressure" ▪ Option PS "Cold tap 1" NPT, ambient pressure" ▪ Option PT "Cold tap G¾", ambient pressure" ▪ Option PU "Cold tap ¾" NPT, ambient pressure" Can be ordered separately: order code DK6ML
Hot tap (low pressure)	**Order code for "Accessory enclosed"** ▪ Option PG "Hot tap G1", low pressure max. 4.5 bar/65 psig" ▪ Option PH "Hot tap 1" NPT, low pressure max. 4.5 bar/65 psig" ▪ Option PK "Hot tap G¾", low pressure max. 4.5 bar/65 psig" ▪ Option PL "Hot tap ¾" NPT, low pressure max. 4.5 bar/65 psig" Mounting set contains mounting boss (process connection), sensor connection with safety chain and ball valve. To insert or remove the sensor at process pressures up to max. 4.5 barg (65 psi). If the accessory is ordered separately, individual combinations can be selected. Order code DK6003
Hot tap (medium pressure)	**Order code for "Accessory enclosed"** ▪ Option PI "Hot tap G1", medium pressure max. 16 bar/230 psig" ▪ Option PJ "Hot tap 1" NPT, medium pressure max. 16 bar/230 psig" ▪ Option PM "Hot tap G¾", medium pressure max. 16 bar/230 psig" ▪ Option PN "Hot tap ¾" NPT, medium pressure max. 16 bar/230 psig" Mounting set contains mounting boss (process connection), sensor connection, ball valve and extractor assembly. To insert or remove the sensor at process pressures up to max. 16 barg (230 psi). If the accessory is ordered separately, individual combinations can be selected. Order code DK6003
Flow conditioner	Can be ordered separately: order code DK6004 **Available for the following pipe diameters:** ▪ DN 80 (3") ▪ DN 100 (4") ▪ DN 150 (6") ▪ DN 200 (8") ▪ DN 250 (10") ▪ DN 300 (12") **Available for the following process connections:** ▪ PN10, EN1092-1 ▪ PN16, EN1092-1 ▪ PN25, EN1092-1 ▪ PN40, EN1092-1 ▪ Cl.150, ASME B16.5 ▪ Cl.300, ASME B16.5 ▪ 10K, JIS B2220 ▪ 20K, JIS B2220 Screws and seals are not included in the delivery.

www.nicsanat.com 021-87700210 NIC SANAT نیک صنعت

14.2 Communication-specific accessories

Accessories	Description
Fieldgate FXA42	Transmission of the measured values of connected 4 to 20 mA analog measuring devices, as well as digital measuring devices ▪ Technical Information TI01297S ▪ Operating Instructions BA01778S ▪ Product page: www.endress.com/fxa42
Field Xpert SMT50	The Field Xpert SMT70 tablet PC for device configuration enables mobile plant asset management in non-hazardous areas. It is suitable for commissioning and maintenance staff to manage field instruments with a digital communication interface and to record progress. This tablet PC is designed as an all-in-one solution with a preinstalled driver library and is an easy-to-use, touch-sensitive tool which can be used to manage field instruments throughout their entire life cycle. ▪ Technical Information TI01342S ▪ Operating Instructions BA01709S ▪ Product page: www.endress.com/smt50
Field Xpert SMT70	The Field Xpert SMT70 tablet PC for device configuration enables mobile plant asset management in hazardous and non-hazardous areas. It is suitable for commissioning and maintenance staff to manage field instruments with a digital communication interface and to record progress. This tablet PC is designed as an all-in-one solution with a preinstalled driver library and is an easy-to-use, touch-sensitive tool which can be used to manage field instruments throughout their entire life cycle. ▪ Technical Information TI01342S ▪ Operating Instructions BA01709S ▪ Product page: www.endress.com/smt70
Field Xpert SMT77	The Field Xpert SMT77 tablet PC for device configuration enables mobile plant asset management in areas categorized as Ex Zone 1. ▪ Technical Information TI01418S ▪ Operating Instructions BA01923S ▪ Product page: www.endress.com/smt77

14.3 Service-specific accessories

Accessories	Description
Applicator	Software for selecting and sizing Endress+Hauser measuring devices: ▪ Choice of measuring devices for industrial requirements ▪ Calculation of all the necessary data for identifying the optimum flowmeter: e.g. nominal diameter, pressure loss, flow velocity and accuracy. ▪ Graphic illustration of the calculation results ▪ Determination of the partial order code, administration, documentation and access to all project-related data and parameters over the entire life cycle of a project. Applicator is available: ▪ Via the Internet: https://portal.endress.com/webapp/applicator ▪ As a downloadable DVD for local PC installation.
W@M	W@M Life Cycle Management Improved productivity with information at your fingertips. Data relevant to a plant and its components is generated from the first stages of planning and during the asset's complete life cycle. W@M Life Cycle Management is an open and flexible information platform with online and on-site tools. Instant access for your staff to current, in-depth data shortens your plant's engineering time, speeds up procurement processes and increases plant uptime. Combined with the right services, W@M Life Cycle Management boosts productivity in every phase. For more information, see: www.endress.com/lifecyclemanagement

www.nicsanat.com 021-87700210 NIC SANAT نیک صنعت

Accessories	Description
FieldCare	FDT-based plant asset management tool from Endress+Hauser. It can configure all smart field units in your system and helps you manage them. By using the status information, it is also a simple but effective way of checking their status and condition. Operating Instructions BA00027S and BA00059S
DeviceCare	Tool to connect and configure Endress+Hauser field devices. Innovation brochure IN01047S

14.4 System components

Accessories	Description
Memograph M graphic data manager	The Memograph M graphic data manager provides information on all the relevant measured variables. Measured values are recorded correctly, limit values are monitored and measuring points analyzed. The data are stored in the 256 MB internal memory and also on a SD card or USB stick. ▪ Technical Information TI00133R ▪ Operating Instructions BA00247R
Ceraphant PTC31B	The pressure transmitter for measuring the absolute and gauge pressure in gases, steam, liquids and dusts. It can be used to read in the operating pressure value. ▪ Technical Information TI01130P ▪ Operating Instructions BA01270P
Cerabar PMC21	The pressure transmitter for measuring the absolute and gauge pressure in gases, steam, liquids and dusts. It can be used to read in the operating pressure value. ▪ Technical Information TI01133P ▪ Operating Instructions BA01271P
Cerabar S PMC71	The pressure transmitter for measuring the absolute and gauge pressure of gases, steam and liquids. It can be used to read in the operating pressure value. ▪ Technical Information TI00383P ▪ Operating Instructions BA00271P

www.nicsanat.com 021-87700210 NIC SANAT نیک صنعت

15 Technical data

15.1 Application

The measuring device is intended only for the flow measurement of gases.

To ensure that the device remains in proper operating condition for its service life, use the measuring device only for media against which the process-wetted materials are sufficiently resistant.

15.2 Function and system design

Measuring principle	Mass flow measurement based on thermal measuring principle.
Measuring system	The device consists of a transmitter and a sensor. The device is available as a compact version: The transmitter and sensor form a mechanical unit. Information on the structure of the device → 14

www.nicsanat.com
021-87700210
NIC SANAT
نیک صنعت

15.3 Input

Measured variable

Measured process variables

- Mass flow
- Temperature

Calculated process variables

- Corrected volume flow
- Volume flow
- FAD volume flow
- Flow velocity
- Calorific value
- 2nd temperature heat difference
- Heat flow
- Energy flow
- Density

Process variables available for order

Order code for "Sensor version":
- Option SB "Bidirectional" measures the flow in both directions (»positive« and »negative« flow) and totalizes the flow in both directions. The device is calibrated in both directions.
- Option SC "Reverse flow detection" only measures the flow in the positive direction. The reverse flow is detected by the device but is not totalized. The device is only calibrated in the positive forward flow direction.

Order code for "Application package":
Option EV "Second gas group" enables the configuration of two different standard gases/gas mixtures in the device and allows the user to switch from one gas group to another using the status input or (if available) via bus communication.

Measuring range

The available measuring range depends on the choice of gas and size of the pipe. Each measuring device is calibrated individually with air under reference operating conditions. No recalibration is required in the case of customer-specific gases, as the device's Gas Engine functionality converts from air to these gases.

The measuring ranges calibrated for air are indicated in the following section. For information on other gases and process conditions, contact your sales organization or use the Applicator selection software.

SI units

- Order code for "Sensor version; sensor; insertion tube", option SA "Unidirectional; stainless steel; stainless steel"
- Order code for "Sensor version; sensor; insertion tube", option HA "Unidirectional; Alloy; stainless steel"

DN [mm]	Full scale value [kg/h] (Air, 20°C, 1.013 bar a)		Full scale value [Nm3/h] (Air, 0°C, 1.013 bar a)	
	Minimum	Maximum	Minimum	Maximum
80	21	2086	16	1613
100	33	3260	25	2521
150	73	7335	57	5672
200	130	13040	101	10084
250	204	20375	158	15757

www.nicsanat.com 021-87700210 NIC SANAT نیک صنعت

DN [mm]	Full scale value [kg/h] (Air, 20°C, 1.013 bar a)		Full scale value [Nm3/h] (Air, 0°C, 1.013 bar a)	
	Minimum	Maximum	Minimum	Maximum
300	293	29 340	227	22 689
400	522	52 160	403	40 337
500	815	81 500	630	63 026
600	1 174	117 360	908	90 758
700	1 597	159 740	1 235	123 531
1 000	3 260	326 000	2 521	252 105
1 500	7 335	733 501	5 672	567 236

- Order code for "Sensor version; sensor; insertion tube:", option SB "Bidirectional; stainless steel; stainless steel"
- Order code for "Sensor version; sensor; insertion tube:", option SC "Reverse flow detection; stainless steel; stainless steel"

DN [mm]	Full scale value [kg/h] (Air, 20°C, 1.013 bar a)		Full scale value [Nm3/h] (Air, 0°C, 1.013 bar a)	
	Minimum	Maximum	Minimum	Maximum
80	13	1 310	10	1 012
100	23	2 310	17	1 786
150	47	4 750	36	3 673
200	84	8 475	65	6 553
250	132	13 250	102	10 246
300	190	19 000	146	14 692
400	337	33 750	260	26 099
500	530	53 000	409	40 986
600	762	76 250	589	58 966
700	1 038	103 820	802	80 286
1 000	2 119	211 900	1 638	163 868
1 500	4 767	476 750	3 686	368 683

US units

- Order code for "Sensor version; sensor; insertion tube", option SA "Unidirectional; stainless steel; stainless steel"
- Order code for "Sensor version; sensor; insertion tube", option HA "Unidirectional; Alloy; stainless steel"

DN [in]	Full scale value [lb/h] (Air, 68°F, 14.7 psi a)		Full scale value [SCFM] (Air, 59°F, 14.7 psi a)	
	Minimum	Maximum	Minimum	Maximum
3	42	4 173	9	909
4	74	7 419	16	1 616
6	167	16 693	36	3 636
8	297	29 677	65	6 464
10	464	46 371	101	10 100
12	668	66 774	145	14 544

www.nicsanat.com 021-87700210 NIC SANAT نیک صنعت

DN [in]	Full scale value [lb/h] (Air, 68°F, 14.7 psi a)		Full scale value [SCFM] (Air, 59°F, 14.7 psi a)	
	Minimum	Maximum	Minimum	Maximum
16	1187	118709	259	25856
20	1855	185482	404	40400
24	2671	267094	582	58176
28	3635	363545	792	79184
40	7419	741929	1616	161600
60	16693	1669340	3636	363600

- Order code for "Sensor version; sensor; insertion tube:", option SB "Bidirectional; stainless steel; stainless steel"
- Order code for "Sensor version; sensor; insertion tube:", option SC "Reverse flow detection; stainless steel; stainless steel"

DN [in]	Full scale value [lb/h] (Air, 68°F, 14.7 psi a)		Full scale value [SCFM] (Air, 59°F, 14.7 psi a)	
	Minimum	Maximum	Minimum	Maximum
3	29	2981	6	648
4	52	5257	11	1144
6	108	10810	23	2354
8	192	19287	42	4200
10	301	30155	65	6567
12	432	43241	94	9417
16	768	76810	167	16729
20	1206	120620	262	26272
24	1735	173533	377	37797
28	2362	236279	514	51463
40	4822	482253	1050	105039
60	10850	1085012	2363	236326

The flow rates listed are only representative for the calibrated conditions and do not necessarily reflect the measuring capacity of the measuring device under operating conditions and the actual pipe internal diameters present on site. To make sure that the correct device version and sizing is selected to suit the application, contact the sales organization or use the Applicator selection software.

Special applications

High gas flow velocities (>70 m/s)

In the case of high gas flow velocities, it is advisable to read in the process pressure dynamically or to enter the pressure as accurately as possible, as a velocity-dependent correction is performed.

www.nicsanat.com
021-87700210
NIC SANAT
نیک صنعت

Light gases (hydrogen, helium)

- The reliable measurement of light gases can be difficult due to their very high thermal conductivity. Depending on the application, the flow rates of light gases are often particularly slow and the flow profiles are not sufficiently developed. The flows are frequently in the laminar flow range, while turbulent flow would actually be needed for optimum measurement.
- Despite loss of accuracy and linearity in applications with light gases and low flow rates, the device measures with a good degree of repeatability and is therefore suitable for monitoring flow conditions (e.g. leak detection).
- The recommended inlet runs must be doubled for light gases.→ 🗎 21

Operable flow range

- 200:1 with factory calibration
- Up to 1000:1 with application-specific adjustment

Input signal

External values

The measuring device provides interfaces which allow values measured externally → 🗎 169 to be transmitted to the measuring device:

- Analog inputs 4-20 mA
- Digital inputs

Pressure values can be transmitted as absolute or gauge pressure. For gauge pressure, the atmospheric pressure must be known or specified by the customer.

Current input

The measured values are written from the automation system to the measuring device via the current input → 🗎 169.

Digital communication

The measured values are written by the automation system via Modbus RS485.

Current input 0/4 to 20 mA

Current input	0/4 to 20 mA (active/passive)
Current span	▪ 4 to 20 mA (active) ▪ 0/4 to 20 mA (passive)
Resolution	1 µA
Voltage drop	Typically: 0.6 to 2 V for 3.6 to 22 mA (passive)
Maximum input voltage	≤ 30 V (passive)
Open-circuit voltage	≤ 28.8 V (active)
Possible input variables	▪ Pressure ▪ Temperature ▪ Mol-% (gas analyzer) ▪ External reference flow rate (in-situ adjustment)

Status input

Maximum input values	▪ DC −3 to 30 V ▪ If status input is active (ON): R_i >3 kΩ
Response time	Configurable: 5 to 200 ms

www.nicsanat.com
021-87700210
NIC SANAT
نیک صنعت

Input signal level	▪ Low signal: DC −3 to +5 V ▪ High signal: DC 12 to 30 V
Assignable functions	▪ Off ▪ Reset the individual totalizers separately ▪ Reset all totalizers ▪ Flow override ▪ Second gas group ▪ Zero point adjustment

www.nicsanat.com
021-87700210
NIC SANAT
نیک صنعت

15.4 Output

Output signal

Modbus RS485

Physical interface	RS485 in accordance with EIA/TIA-485 standard
Terminating resistor	Integrated, can be activated via DIP switches

Current output 4 to 20 mA

Signal mode	Can be set to: ▪ Active ▪ Passive
Current span	Can be set to: ▪ 4 to 20 mA NAMUR ▪ 4 to 20 mA US ▪ 4 to 20 mA ▪ 0 to 20 mA (only if the signal mode is active) ▪ Fixed current
Maximum output values	22.5 mA
Open-circuit voltage	DC 28.8 V (active)
Maximum input voltage	DC 30 V (passive)
Load	0 to 700 Ω
Resolution	0.38 µA
Damping	Configurable: 0 to 999.9 s
Assignable measured variables	▪ Mass flow ▪ Volume flow ▪ Corrected volume flow ▪ FAD volume flow ▪ Flow velocity ▪ Temperature ▪ Energy flow ▪ Pressure ▪ Density ▪ Heat flow ▪ Electronics temperature ▪ 2nd temperature heat difference For SIL (application package), only mass flow

Pulse/frequency/switch output

Function	Can be configured as pulse, frequency or switch output
Version	Open collector Can be set to: ▪ Active ▪ Passive ▪ Passive NAMUR
Maximum input values	DC 30 V, 250 mA (passive)
Open-circuit voltage	DC 28.8 V (active)
Voltage drop	For 22.5 mA: ≤ DC 2 V
Pulse output	
Maximum input values	DC 30 V, 250 mA (passive)
Maximum output current	22.5 mA (active)
Open-circuit voltage	DC 28.8 V (active)

www.nicsanat.com
021-87700210
NIC SANAT
نیک صنعت

Pulse width	Configurable: 0.05 to 2 000 ms
Maximum pulse rate	10 000 Impulse/s
Pulse value	Configurable
Assignable measured variables	▪ Mass flow ▪ Volume flow ▪ Corrected volume flow ▪ FAD volume flow ▪ Energy flow ▪ Heat flow For SIL (application package), only mass flow
Frequency output	
Maximum input values	DC 30 V, 250 mA (passive)
Maximum output current	22.5 mA (active)
Open-circuit voltage	DC 28.8 V (active)
Output frequency	Configurable: end value frequency 2 to 10 000 Hz(f_{max} = 12 500 Hz)
Damping	Configurable: 0 to 999.9 s
Pulse/pause ratio	1:1
Assignable measured variables	▪ Mass flow ▪ Volume flow ▪ Corrected volume flow ▪ FAD volume flow ▪ Flow velocity ▪ Temperature ▪ Energy flow ▪ Pressure ▪ Density ▪ Heat flow ▪ Electronic temperature ▪ 2nd temperature heat difference For SIL (application package), only mass flow
Switch output	
Maximum input values	DC 30 V, 250 mA (passive)
Open-circuit voltage	DC 28.8 V (active)
Switching behavior	Binary, conductive or non-conductive
Switching delay	Configurable: 0 to 100 s
Number of switching cycles	Unlimited

Assignable functions	▪ Off
	▪ On
	▪ Diagnostic behavior
	▪ Limit value
	  ▪ Off
	  ▪ Mass flow
	  ▪ Volume flow
	  ▪ Corrected volume flow
	  ▪ FAD volume flow
	  ▪ Heat flow
	  ▪ Energy flow
	  ▪ Flow velocity
	  ▪ Density
	  ▪ Calorific value
	  ▪ Temperature
	  ▪ 2nd temperature heat difference
	  ▪ Totalizer 1-3
	  ▪ Electronic temperature
	▪ Flow direction monitoring
	▪ Status
	Low flow cut off

www.nicsanat.com 021-87700210 NIC SANAT نیک صنعت

Relay output

Function	Switch output
Version	Relay output, galvanically isolated
Switching behavior	Can be set to: ▪ NO (normally open), factory setting ▪ NC (normally closed)
Maximum switching capacity (passive)	▪ DC 30 V, 0.1 A ▪ AC 30 V, 0.5 A

Assignable functions	▪ Off
	▪ On
	▪ Diagnostic behavior
	▪ Limit value
	  ▪ Off
	  ▪ Mass flow
	  ▪ Volume flow
	  ▪ Corrected volume flow
	  ▪ FAD volume flow
	  ▪ Heat flow
	  ▪ Energy flow
	  ▪ Flow velocity
	  ▪ Density
	  ▪ Temperature
	  ▪ 2nd temperature heat difference
	  ▪ Totalizer 1-3
	  ▪ Electronics temperature
	▪ Flow direction monitoring
	▪ Status
	Low flow cut off

User-configurable input/output

One specific input or output is assigned to a user-configurable input/output (configurable I/O) during device commissioning.

The following inputs and outputs are available for assignment:
- Choice of current output: 4 to 20 mA (active), 0/4 to 20 mA (passive)
- Pulse/frequency/switch output
- Choice of current input: 4 to 20 mA (active), 0/4 to 20 mA (passive)
- Status input

Signal on alarm

Depending on the interface, failure information is displayed as follows:

Modbus RS485

Failure mode	Choose from: ▪ NaN value instead of current value ▪ Last valid value

Current output 0/4 to 20 mA

4 to 20 mA

Failure mode	Choose from: ▪ 4 to 20 mA in accordance with NAMUR recommendation NE 43 ▪ 4 to 20 mA in accordance with US ▪ Min. value: 3.59 mA ▪ Max. value: 22.5 mA ▪ Definable value between: 3.59 to 22.5 mA ▪ Actual value ▪ Last valid value

www.nicsanat.com
021-87700210
NIC SANAT
نیک صنعت

0 to 20 mA

Failure mode	Choose from: ▪ Maximum alarm: 22 mA ▪ Definable value between: 0 to 20.5 mA

Pulse/frequency/switch output

Pulse output	
Fault mode	Choose from: ▪ Actual value ▪ No pulses
Frequency output	
Fault mode	Choose from: ▪ Actual value ▪ 0 Hz ▪ Definable value between: 2 to 12 500 Hz
Switch output	
Fault mode	Choose from: ▪ Current status ▪ Open ▪ Closed

Relay output

Failure mode	Choose from: ▪ Current status ▪ Open ▪ Closed

Local display

Plain text display	With information on cause and remedial measures
Backlight	Red lighting indicates a device error.

Status signal as per NAMUR recommendation NE 107

Interface/protocol

- Via digital communication:
  Modbus RS485
- Via service interface
  - CDI-RJ45 service interface
  - WLAN interface

Plain text display	With information on cause and remedial measures

Web browser

Plain text display	With information on cause and remedial measures

www.nicsanat.com
021-87700210
NIC SANAT
نیک صنعت

Light emitting diodes (LED)

Status information	Status indicated by various light emitting diodes The following information is displayed depending on the device version: ▪ Supply voltage active ▪ Data transmission active ▪ Device alarm/error has occurred Diagnostic information via light emitting diodes → 141

Low flow cut off

The switch points for low flow cut off are user-selectable.

Galvanic isolation

The outputs are galvanically isolated:
- from the power supply
- from one another
- from the potential equalization (PE) terminal

protocol-specific data

Protocol	Modbus Applications Protocol Specification V1.1
Response times	▪ Direct data access: typically 25 to 50 ms ▪ Auto-scan buffer (data range): typically 3 to 5 ms
Device type	Slave
Slave address range	1 to 247
Broadcast address range	0
Function codes	▪ 03: Read holding register ▪ 04: Read input register ▪ 06: Write single registers ▪ 08: Diagnostics ▪ 16: Write multiple registers ▪ 23: Read/write multiple registers
Broadcast messages	Supported by the following function codes: ▪ 06: Write single registers ▪ 16: Write multiple registers ▪ 23: Read/write multiple registers
Supported baud rate	▪ 1 200 BAUD ▪ 2 400 BAUD ▪ 4 800 BAUD ▪ 9 600 BAUD ▪ 19 200 BAUD ▪ 38 400 BAUD ▪ 57 600 BAUD ▪ 115 200 BAUD
Data transmission mode	▪ ASCII ▪ RTU
Data access	Each device parameter can be accessed via Modbus RS485. For Modbus register information
System integration	Information regarding system integration → 73. ▪ Modbus RS485 information ▪ Function codes ▪ Register information ▪ Response time ▪ Modbus data map

www.nicsanat.com
021-87700210
NIC SANAT
نیک صنعت

15.5 Power supply

Terminal assignment

→ 📄 36

Supply voltage

Order code "Power supply"	Terminal voltage		Frequency range
Option **D**	DC 24 V	±20%	–
Option **E**	AC 100 to 240 V	−15...+10%	50/60 Hz, ±4 Hz
Option **I**	DC 24 V	±20%	–
	AC 100 to 240 V	−15...+10%	50/60 Hz, ±4 Hz

Power consumption

Transmitter

Max. 10 W (active power)

switch-on current	Max. 36 A (<5 ms) as per NAMUR Recommendation NE 21

Current consumption

Transmitter

- Max. 400 mA (24 V)
- Max. 200 mA (110 V, 50/60 Hz; 230 V, 50/60 Hz)

Power supply failure

- Totalizers stop at the last value measured.
- Depending on the device version, the configuration is retained in the device memory or in the pluggable data memory (HistoROM DAT).
- Error messages (incl. total operated hours) are stored.

Overcurrent protection element

The device must be operated with a dedicated circuit breaker, as it does not have an ON/OFF switch of its own.
- The circuit breaker must be easy to reach and labeled accordingly.
- Permitted nominal current of the circuit breaker: 2 A up to maximum 10 A.

Electrical connection

→ 📄 37

Potential equalization

→ 📄 40

Terminals

Spring-loaded terminals: Suitable for strands and strands with ferrules.
Conductor cross-section 0.2 to 2.5 mm^2 (24 to 12 AWG).

Cable entries

- Cable gland: M20 × 1.5 with cable ⌀ 6 to 12 mm (0.24 to 0.47 in)
- Thread for cable entry:
  - NPT ½"
  - G ½"
  - M20

Cable specification

→ 📄 33

www.nicsanat.com 021-87700210 NIC SANAT نیک صنعت

Overvoltage protection

Mains voltage fluctuations	→ 🗎 176
Overvoltage category	Overvoltage category II
Short-term, temporary overvoltage	Up to 1200 V between cable and ground, for max. 5 s
Long-term, temporary overvoltage	Up to 500 V between cable and ground

www.nicsanat.com
021-87700210
NIC SANAT
نیک صنعت

15.6 Performance characteristics

Reference operating conditions

- Error limits based on ISO 11631
- Dry air with +20 to +30 °C (+68 to +86 °F) at 0.8 to 1.5 bar (12 to 22 psi)
- Specifications as per calibration protocol
- Accuracy based on accredited calibration rigs that are traced to ISO 17025.

To obtain measured errors, use the *Applicator* sizing tool → 163

Maximum measured error

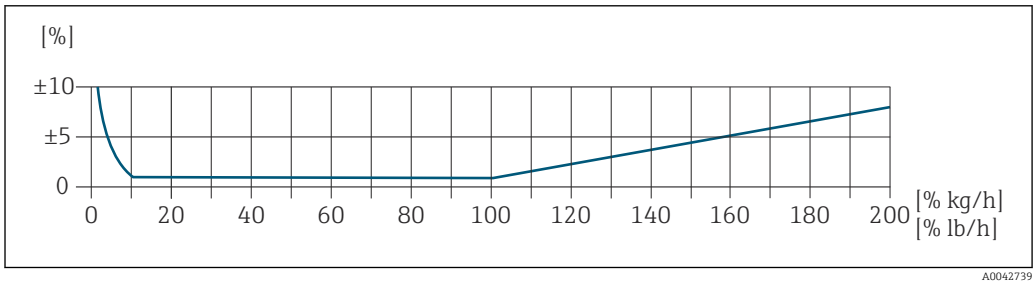

A0042739

Calibrated measuring range

The measuring accuracy is specified in relation to the mass flow and divided into two ranges:

- ±1.0 % of the current measured value for 100% to 10% of the calibrated measuring range (under reference operating conditions)
- ±0.10 % of the calibrated full scale value for 10% to 1% of the calibrated measuring range (under reference operating conditions)

The measuring device is calibrated and adjusted on an accredited and traceable calibration rig and its accuracy is certified in a calibration report [1] (5 control points).

Order code for "Calibration flow":

- Option G "Factory calibration": calibration report (5 control points)
- Option K "Traceable ISO/IEC17025": Swiss Calibration Services (SCS) calibration report (5 control points) which confirms traceability to the national calibration standard

For information on calibrated measuring ranges and maximum full scale values → 166

Extended measuring range

The device has an extended measuring range that goes beyond the maximum calibrated value (100%). Here, the last measured values in the calibrated range are taken and then extrapolated. The end of the extrapolated range is only reached once the productive energy of the sensor is exceeded and/or the Mach number is greater than listed below.

Mach number	Order code
0.2	▪ Order code for "Sensor version; sensor; insertion tube:", option SB "Bidirectional; stainless steel; stainless steel" ▪ Order code for "Sensor version; sensor; insertion tube:", option SC "Reverse flow detection; stainless steel; stainless steel"
0.4	▪ Order code for "Sensor version; sensor; insertion tube:", option SA "Unidirectional; stainless steel; stainless steel" ▪ Order code for "Sensor version; sensor; insertion tube:", option HA "Unidirectional; Alloy; stainless steel"

1) Two calibration reports for the order code for "Sensor version; sensor; insertion tube:", option SB "Bidirectional; stainless steel; stainless steel"

www.nicsanat.com
021-87700210
NIC SANAT
نیک صنعت

The accuracy is specified in relation to the mass flow.
±1.0% ±(current measured value in % -100%) × 0.07 for 100% to 200% of the calibrated measuring range (under reference operating conditions)

Accuracy of outputs

The outputs have the following base accuracy specifications.

Current output

Accuracy	±5 µA

Pulse/frequency output

o.r. = of reading

Accuracy	Max. ±50 ppm o.r. (over the entire ambient temperature range)

Repeatability

±0.25 % of the display value for velocities above 1.0 m/s (3.3 ft/s)

Response time

Typically < 3 s for 63 % of a step change (in both directions)

Influence of ambient temperature

Current output

Temperature coefficient	Max. 1 µA/°C

Pulse/frequency output

Temperature coefficient	No additional effect. Included in accuracy.

Influence of medium temperature

Air: 0.02 % per °C (0.036 % per °F) of the process temperature change in relation to the reference temperature

Influence of medium pressure

Air: 0.3 % per bar (0.02 % per psi) of the process pressure change (from the set process pressure)

15.7 Mounting

Mounting requirements

→ 📄 19

www.nicsanat.com
021-87700210
NIC SANAT
نیک صنعت

15.8 Environment

Ambient temperature range

Measuring device	▪ −40 to +60 °C (−40 to +140 °F) ▪ Order code for "Test, certificate", option JP: −50 to +60 °C (−58 to +140 °F)
Readability of the local display	−20 to +60 °C (−4 to +140 °F) The readability of the display may be impaired at temperatures outside the temperature range.

NOTICE

Danger of overheating

- ▶ Ensure that the temperature at the lower end of the transmitter housing does not exceed 80 °C (176 °F).
- ▶ Ensure that sufficient convection takes place at the transmitter neck.
- ▶ When using in potentially explosive atmospheres, observe the information in the device-specific Ex documentation. For detailed information on the temperature tables, see the separate document entitled "Safety Instructions" (XA) for the device.
- ▶ Ensure that a sufficiently large area of the transmitter neck remains exposed. The uncovered part serves as a radiator and protects the electronics from overheating and excessive cooling.

- ▶ If operating outdoors:
  Avoid direct sunlight, particularly in warm climatic regions.

You can order a weather protection cover from Endress+Hauser→ 📄 161.

Storage temperature

−50 to +80 °C (−58 to +176 °F), preferably at +20 °C (+68 °F)

Atmosphere

If a plastic transmitter housing is permanently exposed to certain steam and air mixtures, this can damage the housing.

In cases of doubt, please contact the Sales Center.

Degree of protection

Transmitter

- IP66/67, Type 4X enclosure, suitable for pollution degree 4
- When the housing is open: IP20, Type 1 enclosure, suitable for pollution degree 2
- Display module: IP20, Type 1 enclosure, suitable for pollution degree 2

Optional

Order code for "Sensor options", option CC "IP68, Type 6P, Cust-potted"

External WLAN antenna

IP67

Vibration- and shock-resistance

Vibration sinusoidal, in accordance with IEC 60068-2-6

- 2 to 8.4 Hz, 3.5 mm peak
- 8.4 to 2 000 Hz, 1 g peak

Vibration broad-band random, according to IEC 60068-2-64

www.nicsanat.com 021-87700210 NIC SANAT نیک صنعت

- 10 to 200 Hz, 0.003 g^2/Hz
- 200 to 2 000 Hz, 0.001 g^2/Hz
- Total: 1.54 g rms

Shock half-sine, according to IEC 60068-2-27

6 ms 30 g

Rough handling shocks according to IEC 60068-2-31

Interior cleaning	Suitable for cleaning-in-place (CIP) and sterilization-in-place (SIP). **Manufacturer options for delivery of parts** ▪ Oil- and grease-free wetted parts, no declaration. Order code for "Service", option HA. ▪ Oil- and grease-free wetted parts as per IEC/TR 60877-2.0 and BOC 50000810-4, with declaration. Order code for "Service", option HB. The plant operator must ensure that the measuring device meets the requirements of the operator's oxygen application.
Electromagnetic compatibility (EMC)	As per IEC/EN 61326 and NAMUR Recommendation 21 (NE 21) Details are provided in the Declaration of Conformity. This unit is not intended for use in residential environments and cannot guarantee adequate protection of the radio reception in such environments.

www.nicsanat.com 021-87700210 NIC SANAT نیک صنعت

15.9 Process

Medium temperature range

Sensor
−40 to +180 °C (−40 to +356 °F)

Seals
- Sealing rings:
  - EPDM −40 to +140 °C (−40 to +284 °F)
  - FKM −40 to +180 °C (−40 to +356 °F)
- Ferrule:
  - PEEK −40 to +140 °C (−40 to +284 °F)
  - PVDF −20 to +110 °C (−4 to +230 °F)
  - 1.4404 −40 to +180 °C (−40 to +356 °F)

Ferrule in 1.4404: ferrule has a fixed position on the shaft. Restriction for repeat calibrations (observe minimum insertion depth → 20)

Medium pressure range

Minimum 0.5 bar absolute. Maximum permitted medium pressure → 182

Pressure/temperature ratings

The following pressure/temperature diagrams apply to all pressure-bearing parts of the device and not just the process connection. The diagrams show the maximum permissible medium pressure depending on the specific medium temperature.

Ferrule

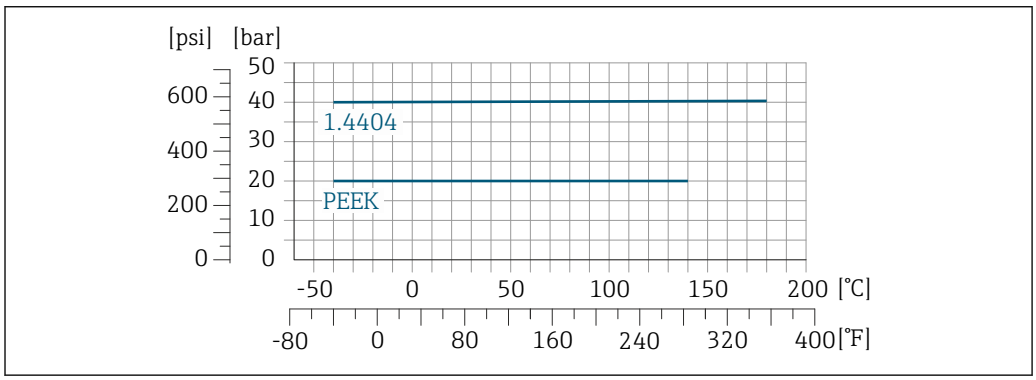

40 *With compression fitting material 1.4404/F316L/F316*

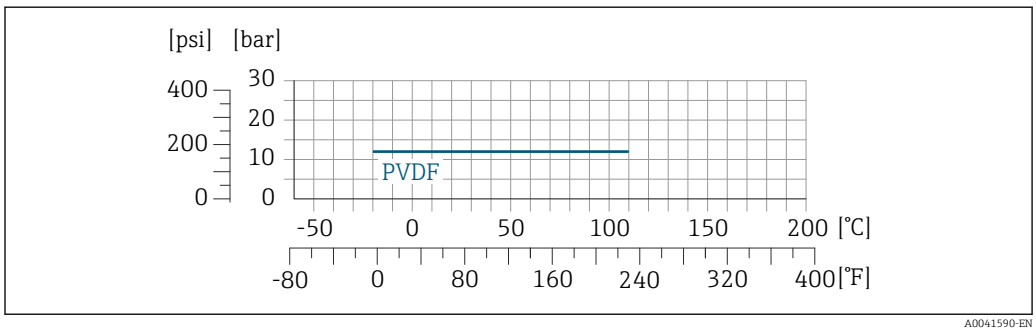

41 *With compression fitting material 1.4404/F316L/F316*

Flow limit

Measuring range → 166

www.nicsanat.com
021-87700210
NIC SANAT
نیک صنعت

The maximum flow depends on the gas type and the pipe nominal diameter used. The end of the measuring range is reached when the Mach number listed below is reached.

Mach number	Order code
0.2	▪ Order code for "Sensor version; sensor; insertion tube:", option SB "Bidirectional; stainless steel; stainless steel" ▪ Order code for "Sensor version; sensor; insertion tube:", option SC "Reverse flow detection; stainless steel; stainless steel"
0.4	▪ Order code for "Sensor version; sensor; insertion tube:", option SA "Unidirectional; stainless steel; stainless steel" ▪ Order code for "Sensor version; sensor; insertion tube:", option HA "Unidirectional; Alloy; stainless steel"

Use the Applicator to size the device.

Pressure loss

Use the Applicator for precise calculations.

System pressure

→ 26

Hot tap, process pressure

Only use the hot tap for mounting and removal at process pressure for non-toxic, innocuous gases.

Medium pressure version
- Max. process pressure: 20 bar (290 psi)
- Max. extraction pressure: 16 bar (230 psi)
- Max. extraction temperature: +50 °C (+122 °F)
- Min. insertion sensor length: 435mm (17")

Low pressure version
- Max. process pressure: 20 bar (290 psi)
- Max. extraction pressure: 4.5 bar (65 psi)
- Max. extraction temperature: +50 °C (+122 °F)
- Min. insertion sensor length: 335mm (13")

Cold tap, ambient pressure

Cold tap for mounting and removal at ambient pressure.

- Max. process pressure: 20 bar (290 psi)
- Max. extraction pressure: 1 bar (14.5 psi)
- Max. extraction temperature: +50 °C (+122 °F)
- Min. insertion sensor length: 335mm (13")

Mounting boss

To mount the device directly on the process pipe.

Max. process pressure: 40 bar (580 psi)

www.nicsanat.com
021-87700210
NIC SANAT
نیک صنعت

15.10 Mechanical construction

Design, dimensions

For the dimensions and installation lengths of the device, see the "Technical Information" document, "Mechanical construction" section .

Weight

All values (weight exclusive of packaging material) refer to devices with EN/DIN PN 40 flanges. Weight specifications including transmitter as per order code for "Housing", option A "Aluminum, coated".

Different values due to different transmitter versions:
Transmitter version for the hazardous area
(Order code for "Housing", option A "Aluminum, coated"; Ex d): +2 kg (+4.4 lbs)

Weight in SI units

Installed length [mm]	Weight [kg]
235	4.8
335	4.9
435	5
608	5.1

Weight in US units

Installed length [in]	Weight [lbs]
9	10.6
13	10.8
17	11
24	11.2

Materials

Transmitter housing

Order code for "Housing":
Option **A** "Aluminum, coated": aluminum, AlSi10Mg, coated

Window material

Order code for "Housing":
Option **A** "Aluminum, coated": glass

www.nicsanat.com
021-87700210
NIC SANAT
نیک صنعت

Cable entries/cable glands

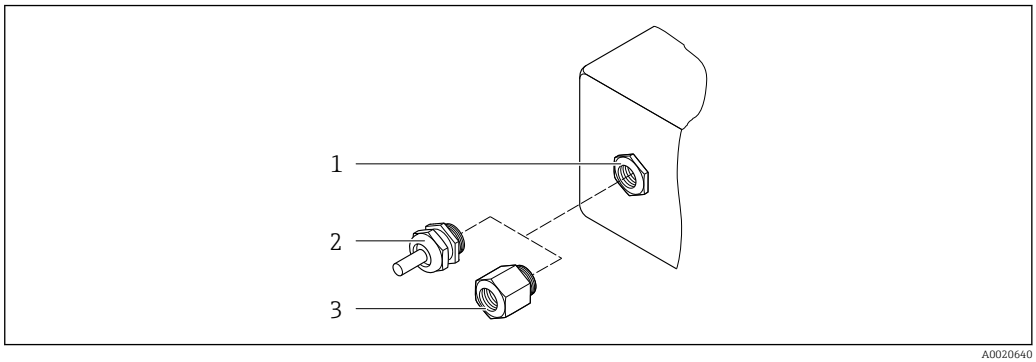

42 Possible cable entries/cable glands

1 Female thread M20 × 1.5
2 Cable gland M20 × 1.5
3 Adapter for cable entry with female thread G ½" or NPT ½"

Order code for "Housing", option A "Aluminum, coated"

The various cable entries are suitable for hazardous and non-hazardous areas.

Cable entry/cable gland	Material
Compression fitting M20 × 1.5	Non-Ex: plastic
	Z2, D2, Ex d/de: brass with plastic
Adapter for cable entry with female thread G ½"	Nickel-plated brass
Adapter for cable entry with female thread NPT ½"	

Materials for insertion tube

Stainless steel, 1.4404 (316/316L)

Process connections, process coupling

Stainless steel, 1.4404 (316/316L)

Sensing element

Unidirectional
- Stainless steel, 1.4404 (316/316L)
- Alloy C22, 2.4602 (UNS N06022);

Bidirectional
Stainless steel, 1.4404 (316/316L)

Reverse flow detection
Stainless steel, 1.4404 (316/316L)

Ferrules

- PEEK
- PVDF
- 1.4404 (316/316L)

www.nicsanat.com 021-87700210 NIC SANAT نیک صنعت

Flat ring seal

- EPDM
- FKM

For aggressive media (e.g. chlorine or ozone), we recommend special materials (Alloy for sensing element, PVDF or 1.4404 for ferrules and FKM for flat seal). For any requests, please contact the Endress+Hauser sales organization responsible for your area.

Sensor guard

Stainless steel, 1.4404 (316/316L)

Accessories

Protective cover

Stainless steel, 1.4404 (316L)

External WLAN antenna

- Antenna: ASA plastic (acrylonitrile styrene acrylate) and nickel-plated brass
- Adapter: Stainless steel and nickel-plated brass
- Cable: Polyethylene
- Plug: Nickel-plated brass
- Angle bracket: Stainless steel

Mounting boss (DK6MB)

Stainless steel, 1.4404 (316/316L)

Cold/hot tap, low pressure and medium pressure

Welding socket

Stainless steel 1.4404 (316L)

Ball valve

- Stainless cast steel CF3M or CF8M
- Seal: PTFE

Sensor connection

Stainless steel, 1.4404 (316/316L)

Cold tap, atmospheric pressure

- Stainless steel, 1.4404 (316/316L)
- Stainless cast steel CF3M or CF8M
- Seal: PTFE

Process connections

- G¾", ISO 228/1 compression fitting
- G1", ISO 228/1, compression fitting
- ¾" NPT, compression fitting
- 1" NPT, compression fitting

For information on the different materials used in the process connections → 📄 185

www.nicsanat.com 021-87700210 NIC SANAT نیک صنعت

15.11 Display and user interface

Languages

Can be operated in the following languages:
- Via local operation
  English, German, French, Spanish, Italian, Dutch, Portuguese, Polish, Russian, Turkish, Chinese, Japanese, Korean, Vietnamese, Czech, Swedish
- Via Web browser
  English, German, French, Spanish, Italian, Dutch, Portuguese, Polish, Russian, Turkish, Chinese, Japanese, Vietnamese, Czech, Swedish
- Via "FieldCare", "DeviceCare" operating tool: English, German, French, Spanish, Italian, Chinese, Japanese

Local operation

Via display module

Equipment:
- Order code for "Display; operation", option F "4-line, illuminated, graphic display; touch control"
- Order code for "Display; operation", option G "4-line, illuminated, graphic display; touch control + WLAN"

Information about WLAN interface → 68

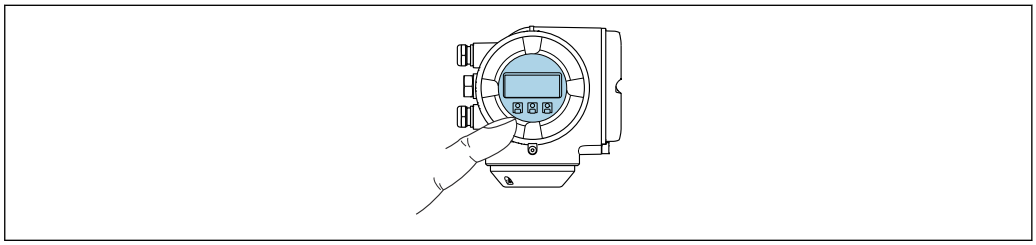

A0026785

43 *Operation with touch control*

Display elements

- 4-line, illuminated, graphic display
- White background lighting; switches to red in event of device errors
- Format for displaying measured variables and status variables can be individually configured

Operating elements

- External operation via touch control (3 optical keys) without opening the housing: ⊞, ⊟, E
- Operating elements also accessible in the various zones of the hazardous area

Via remote display and operating module DKX001

The remote display and operating module DKX001 is available as an optional extra → 161.

- The measuring device is always supplied with a dummy cover when the remote display and operating module DKX001 is ordered directly with the measuring device. Display or operation at the transmitter is not possible in this case.
- If ordered subsequently, the remote display and operating module DKX001 may not be connected at the same time as the existing measuring device display module. Only one display or operation unit may be connected to the transmitter at any one time.

www.nicsanat.com 021-87700210 NIC SANAT نیک صنعت

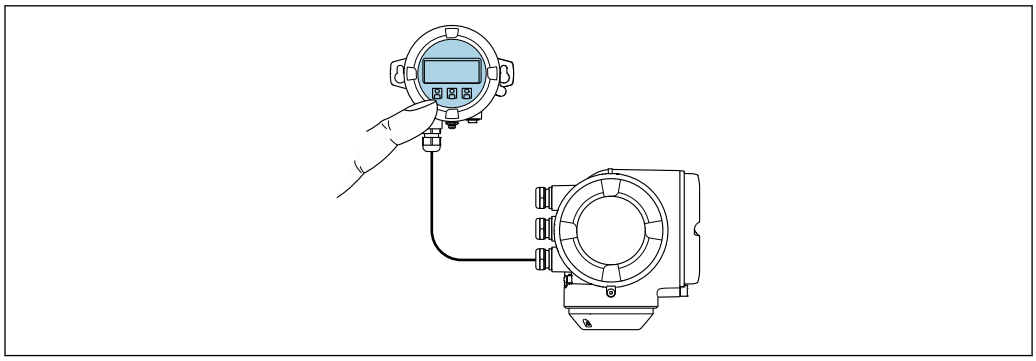

A0026786

44 *Operation via remote display and operating module DKX001*

Display and operating elements

The display and operating elements correspond to those of the display module → 187.

Housing material

Transmitter housing		Remote display and operating module
Order code for "Housing"	**Material**	**Material**
Option **A** "Aluminum, coated"	AlSi10Mg, coated	AlSi10Mg, coated

Cable entry

Corresponds to the choice of transmitter housing, order code for "Electrical connection".

Connecting cable

→ 34

Dimensions

Information about dimensions:
"Mechanical construction" section of the "Technical Information" document.

Remote operation

→ 67

Service interface

→ 67

Supported operating tools

Different operating tools can be used for local or remote access to the measuring device. Depending on the operating tool used, access is possible with different operating units and via a variety of interfaces.

Supported operating tools	Operating unit	Interface	Additional information
Web browser	Notebook, PC or tablet with web browser	▪ CDI-RJ45 service interface ▪ WLAN interface	Special Documentation for device
DeviceCare SFE100	Notebook, PC or tablet with Microsoft Windows system	▪ CDI-RJ45 service interface ▪ WLAN interface ▪ Fieldbus protocol	→ 163

www.nicsanat.com
021-87700210
NIC SANAT
نیک صنعت

Supported operating tools	Operating unit	Interface	Additional information
FieldCare SFE500	Notebook, PC or tablet with Microsoft Windows system	▪ CDI-RJ45 service interface ▪ WLAN interface ▪ Fieldbus protocol	→ 🗎 163
Field Xpert	SMT70/77/50	▪ All Fieldbus protocols ▪ WLAN interface ▪ Bluetooth ▪ CDI-RJ45 service interface	Operating Instructions BA01202S Device description files: Use update function of handheld terminal
SmartBlue app	Smart phone or tablet with iOs or Android	WLAN	→ 🗎 163

Other operating tools based on FDT technology with a device driver such as DTM/iDTM or DD/EDD can be used for device operation. These operating tools are available from the individual manufacturers. Integration into the following operating tools, among others, is supported:

- Field Device Manager (FDM) from Honeywell → www.process.honeywell.com
- FieldMate from Yokogawa → www.yokogawa.com
- PACTWare → www.pactware.com

The related device description files are available: www.endress.com → Download Area

Web server

With the integrated web server, the device can be operated and configured via a web browser service interface (CDI-RJ45) or WLAN interface. The structure of the operating menu is the same as for the local display. In addition to the measured values, status information on the device is displayed and can be used to monitor device health. Furthermore the device data can be managed and the network parameters can be configured.

A device that has a WLAN interface (can be ordered as an option) is required for the WLAN connection: order code for "Display; operation", option G "4-line, illuminated; touch control + WLAN". The device acts as an Access Point and enables communication by computer or a mobile handheld terminal.

Supported functions
Data exchange between the operating unit (such as a notebook, for example,) and measuring device:
- Upload the configuration from the measuring device (XML format, configuration backup)
- Save the configuration to the measuring device (XML format, restore configuration)
- Export event list (.csv file)
- Export parameter settings (.csv file or PDF file, document the measuring point configuration)
- Export the Heartbeat verification log (PDF file, only available with the **Heartbeat Verification** → 🗎 195 application package)
- Flash firmware version for device firmware upgrade, for example
- Download driver for system integration
- Visualize up to 1000 saved measured values (only available with the **Extended HistoROM** application package→ 🗎 195)

Special Documentation for web server

www.nicsanat.com 021-87700210 NIC SANAT نیک صنعت

HistoROM data management

The measuring device features HistoROM data management. HistoROM data management comprises both the storage and import/export of key device and process data, making operation and servicing far more reliable, secure and efficient.

When the device is delivered, the factory settings of the configuration data are stored as a backup in the device memory. This memory can be overwritten with an updated data record, for example after commissioning.

Additional information on the data storage concept

There are different types of data storage units in which device data are stored and used by the device:

	HistoROM backup	T-DAT	S-DAT
Available data	▪ Event logbook, e.g. diagnostic events ▪ Parameter data record backup ▪ Device firmware package	▪ Measured value logging ("Extended HistoROM" order option) ▪ Current parameter data record (used by firmware at run time) ▪ Indicator (minimum/maximum values) ▪ Totalizer value	▪ Sensor data: e.g. nominal diameter ▪ Serial number ▪ Calibration data ▪ Device configuration (e.g. SW options, fixed I/O or multi I/O)
Storage location	Fixed on the user interface PC board in the connection compartment	Can be plugged into the user interface PC board in the connection compartment	In the sensor plug in the transmitter neck part

Data backup

Automatic

- The most important device data (sensor and transmitter) are automatically saved in the DAT modules
- If the transmitter or measuring device is replaced: once the T-DAT containing the previous device data has been exchanged, the new measuring device is ready for operation again immediately without any errors
- If exchanging the electronics module (e.g. I/O electronics module): Once the electronics module has been replaced, the software of the module is compared against the current device firmware. The module software is upgraded or downgraded where necessary. The electronics module is available for use immediately afterwards and no compatibility problems occur.

Manual

Additional parameter data record (complete parameter settings) in the integrated device memory HistoROM backup for:

- Data backup function
  Backup and subsequent restoration of a device configuration in the device memory HistoROM backup
- Data comparison function
  Comparison of the current device configuration with the device configuration saved in the device memory HistoROM backup

Data transmission

Manual

Transfer of a device configuration to another device using the export function of the specific operating tool, e.g. with FieldCare, DeviceCare or Web server: to duplicate the configuration or to store in an archive (e.g. for backup purposes)

www.nicsanat.com
021-87700210
NIC SANAT
نیک صنعت

Event list

Automatic

- Chronological display of up to 20 event messages in the events list
- If the **Extended HistoROM** application package (order option) is enabled: up to 100 event messages are displayed in the events list along with a time stamp, plain text description and remedial measures
- The events list can be exported and displayed via a variety of interfaces and operating tools e.g. DeviceCare, FieldCare or Web server

Data logging

Manual

If the **Extended HistoROM** application package (order option) is enabled:

- Recording of 1 to 4 channels of up to 1 000 measured values (up to 250 measured values per channel)
- User configurable recording interval
- Export the measured value log via a variety of interfaces and operating tools e.g. FieldCare, DeviceCare or web server

www.nicsanat.com
021-87700210
NIC SANAT
نیک صنعت

15.12 Certificates and approvals

Current certificates and approvals for the product are available at www.endress.com on the relevant product page:

1. Select the product using the filters and search field.
2. Open the product page.
3. Select **Downloads**.

CE mark

The device meets the legal requirements of the applicable EU Directives. These are listed in the corresponding EU Declaration of Conformity along with the standards applied.

Endress+Hauser confirms successful testing of the device by affixing to it the CE mark.

UKCA marking

The device meets the legal requirements of the applicable UK regulations (Statutory Instruments). These are listed in the UKCA Declaration of Conformity along with the designated standards. By selecting the order option for UKCA marking, Endress+Hauser confirms a successful evaluation and testing of the device by affixing the UKCA mark.

Contact address Endress+Hauser UK:
Endress+Hauser Ltd.
Floats Road
Manchester M23 9NF
United Kingdom
www.uk.endress.com

RCM marking

The measuring system meets the EMC requirements of the "Australian Communications and Media Authority (ACMA)".

Ex approval

The measuring device is certified for use in hazardous areas and the relevant safety instructions are provided in the separate "Safety Instructions" (XA) document. Reference is made to this document on the nameplate.

Devices with the order code for "Approval", option BB or BD have equipment protection level (EPL) Ga/Gb (Zone 0 in the measuring tube).

The separate Ex documentation (XA) containing all the relevant explosion protection data is available from your Endress+Hauser sales center.

ATEX, IECEx

Currently, the following versions for use in hazardous areas are available:

Ex db eb

Category	Type of protection
II1/2G	Ex db eb ia IIC T4...T1 Ga/Gb
II2G	Ex db eb ia IIC T4...T1 Gb

Ex db

Category	Type of protection
II1/2G	Ex db ia IIC T4...T1 Ga/Gb
II2G	Ex db ia IIC T4...T1 Gb

www.nicsanat.com
021-87700210
NIC SANAT
نیک صنعت

Ex ec

Category	Type of protection
II3G	Ex ec IIC T4...T1 Gc

Ex tb

Category	Type of protection
II2D	Ex tb IIIC T** °C Db

$_{c}$CSA$_{US}$

Currently, the following versions for use in hazardous areas are available:

XP (Ex d)
Class I, II, III Division 1 Groups A-G

NI (Ex ec)
Class I Division 2 Groups A - D

Ex de
- Class I, Zone 1 AEx/ Ex de ia IIC T4...T1 Ga/Gb
- Class I, Zone 1 AEx/ Ex de ia IIC T4...T1 Gb

Ex db
- Class I, Zone 1 AEx/ Ex db ia IIC T4...T1 Ga/Gb
- Class I, Zone 1 AEx/ Ex db ia IIC T4...T1 Gb

Ex ec
Class I, Zone 2 AEx/ Ex ec IIC T4...T1 Gc

Ex tb
Zone 21 AEx/ Ex tb IIIC T** °C Db

Functional safety

The measuring device can be used for flow monitoring systems (min., max., range) up to SIL 2 (single-channel architecture; order code for "Additional approval", option LA) and SIL 3 (multi-channel architecture with homogeneous redundancy) and is independently evaluated and certified in accordance with IEC 61508.

The following types of monitoring in safety equipment are possible:
Mass flow

Functional safety manual with information and restrictions for the SIL device
→ 196

Radio approval

The measuring device has radio approval.

For detailed information on the radio approval, see the Special Documentation
→ 196

Additional certification

CRN approval

Some device versions have CRN approval. A CRN-approved process connection with a CSA approval must be ordered for a CRN-approved device.

www.nicsanat.com
021-87700210
NIC SANAT
نیک صنعت

External standards and guidelines	▪ EN 60529 Degrees of protection provided by enclosure (IP code) ▪ EN 61010-1 Safety requirements for electrical equipment for measurement, control and laboratory use - general requirements ▪ IEC/EN 61326-2-3 Emission in accordance with Class A requirements. Electromagnetic compatibility (EMC requirements). ▪ NAMUR NE 21 Electromagnetic compatibility (EMC) of industrial process and laboratory control equipment ▪ NAMUR NE 32 Data retention in the event of a power failure in field and control instruments with microprocessors ▪ NAMUR NE 43 Standardization of the signal level for the breakdown information of digital transmitters with analog output signal. ▪ NAMUR NE 53 Software of field devices and signal-processing devices with digital electronics ▪ NAMUR NE 105 Specifications for integrating fieldbus devices in engineering tools for field devices ▪ NAMUR NE 107 Self-monitoring and diagnosis of field devices ▪ NAMUR NE 131 Requirements for field devices for standard applications ▪ ETSI EN 300 328 Guidelines for 2.4 GHz radio components. ▪ EN 301489 Electromagnetic compatibility and radio spectrum matters (ERM).
Classification of process sealing between electrical systems and (flammable or combustible) process fluids in accordance with ANSI/ISA 12.27.01	Endress+Hauser devices are designed in accordance with ANSI/ISA 12.27.01. allowing the user to waive the use and save the cost of installing external secondary process seals in the conduit as required by the process sealing sections of ANSI/NFPA 70 (NEC) and CSA 22.1 (CEC). These devices comply with the North American installation practice and provide a very safe and cost-saving installation for pressurized applications with hazardous fluids. Further information can be found in the control drawings of the relevant devices.

www.nicsanat.com
021-87700210
NIC SANAT
نیک صنعت

15.13 Application packages

Many different application packages are available to enhance the functionality of the device. Such packages might be needed to address safety aspects or specific application requirements.

The application packages can be ordered with the device or subsequently from Endress+Hauser. Detailed information on the order code in question is available from your local Endress+Hauser sales center or on the product page of the Endress+Hauser website: www.endress.com.

Detailed information on the application packages:
Special Documentation → 196

Diagnostic functionality

Order code for "Application package", option EA "Extended HistoROM"

Comprises extended functions concerning the event log and the activation of the measured value memory.

Event log:
Memory volume is extended from 20 message entries (standard version) to up to 100 entries.

Data logging (line recorder):
- Memory capacity for up to 1000 measured values is activated.
- 250 measured values can be output via each of the 4 memory channels. The recording interval can be defined and configured by the user.
- Measured value logs can be accessed via the local display or operating tool e.g. FieldCare, DeviceCare or Web server.

For detailed information, see the Operating Instructions for the device.

Heartbeat Technology

Order code for "Application package", option EB "Heartbeat Verification + Monitoring"

Heartbeat Verification
Meets the requirement for traceable verification to DIN ISO 9001:2008 Chapter 7.6 a) "Control of monitoring and measuring equipment".
- Functional testing in the installed state without interrupting the process.
- Traceable verification results on request, including a report.
- Simple testing process via local operation or other operating interfaces.
- Clear measuring point assessment (pass/fail) with high test coverage within the framework of manufacturer specifications.
- Extension of calibration intervals according to operator's risk assessment.

Heartbeat Monitoring
Continuously supplies data, which are characteristic of the measuring principle, to an external condition monitoring system for the purpose of preventive maintenance or process analysis. These data enable the operator to:
- Draw conclusions - using these data and other information - about the impact on the measuring performance over time.
- Schedule servicing in time.
- Monitor the process or product quality , e.g. process stability.

Special Documentation SD02712D

Second gas group

Package	Description
Second gas group	This application package enables the configuration of two different standard gases/gas mixtures in the device and allows the user to switch from one gas group to another using the status input or (if available) via bus communication.

www.nicsanat.com
021-87700210
NIC SANAT
نیک صنعت

15.14 Accessories

Overview of accessories available for order → 161

15.15 Documentation

For an overview of the scope of the associated Technical Documentation, refer to the following:
- *Device Viewer* (www.endress.com/deviceviewer): Enter the serial number from the nameplate
- *Endress+Hauser Operations app*: Enter serial number from nameplate or scan matrix code on nameplate.

Standard documentation

Brief Operating Instructions

Brief Operating Instructions for the sensor

Measuring device	Documentation code
Proline t-mass I	KA01443D

Brief Operating Instructions for transmitter

Measuring device	Documentation code
Proline 300	KA01445D

Technical Information

Measuring device	Documentation code
t-mass I 300	TI01501D

Description of Device Parameters

Measuring device	Documentation code
t-mass 300	GP01144D

Supplementary device-dependent documentation

Safety instructions

Safety instructions for electrical equipment for hazardous areas.

Contents	Documentation code
ATEX/IECEx Ex d/Ex de	XA01965D
ATEX/IECEx Ex ec	XA01966D
cCSAus XP	XA01969D
cCSAus Ex d/ Ex de	XA01967D
cCSAus Ex nA	XA01968D

www.nicsanat.com
021-87700210
NIC SANAT
نیک صنعت

Remote display and operating module DKX001

Contents	Documentation code
ATEX/IECEx Ex i	XA01494D
ATEX/IECEx Ex ec	XA01498D
cCSAus IS	XA01499D
cCSAus Ex nA	XA01513D
INMETRO Ex i	XA01500D
INMETRO Ex ec	XA01501D
NEPSI Ex i	XA01502D
NEPSI Ex nA	XA01503D

Special documentation

Contents	Documentation code
Information on the Pressure Equipment Directive	SD01614D
Remote display and operating module DKX001	SD01763D
Radio approvals for WLAN interface for A309/A310 display module	SD01793D
Web server	SD02486D
Heartbeat Technology	SD02478D

Installation Instructions

Contents	Comment
Installation instructions for spare part sets and accessories	▪ Access the overview of all the available spare part sets via *Device Viewer* → 🗎 159 ▪ Accessories available for order with Installation Instructions

www.nicsanat.com
021-87700210
NIC SANAT
نیک صنعت

Index

A
Access authorization to parameters
- Read access . . . 59
- Write access . . . 59

Access code . . . 59
- Incorrect input . . . 59

Adapting the diagnostic behavior . . . 147
Additional certification . . . 193
Ambient temperature
- Influence . . . 179

Application . . . 165
Approvals . . . 192
Auto scan buffer
- see Modbus RS485 Modbus data map

C
Cable entries
- Technical data . . . 176

Cable entry
- Degree of protection . . . 44

CE mark . . . 10, 192
Certificates . . . 192
Check
- Connection . . . 45

Checklist
- Post-connection check . . . 45
- Post-installation check . . . 32

Cleaning
- Cleaning the sensing element . . . 157
- Exterior cleaning . . . 157
- Sensing element . . . 157

Cold tap, ambient pressure . . . 183
Commissioning . . . 78
- Advanced settings . . . 106
- Configuring the measuring device . . . 79

Configuring error response mode, Modbus RS485 . . . 147
Connecting cable . . . 33, 34
Connecting the measuring device . . . 37
Connecting the signal cables . . . 37
Connecting the supply voltage cables . . . 37
Connection
- see Electrical connection

Connection preparations . . . 36
Connection tools . . . 33
Context menu
- Calling up . . . 55
- Closing . . . 55
- Explanation . . . 55

Current consumption . . . 176

D
Date of manufacture . . . 16, 17
Declaration of Conformity . . . 10
Defining the access code . . . 125, 126
Degree of protection . . . 44, 180
Device components . . . 14
Device description files . . . 72
Device locking, status . . . 129
Device name
- Sensor . . . 17
- Transmitter . . . 16

Device repair . . . 159
Device revision . . . 72
Device type ID . . . 72
Device Viewer . . . 159
DeviceCare . . . 71
- Device description file . . . 72

Diagnosis
- Symbols . . . 142

Diagnostic behavior
- Explanation . . . 143
- Symbols . . . 143

Diagnostic information
- Communication interface . . . 147
- Design, description . . . 143, 146
- DeviceCare . . . 145
- FieldCare . . . 145
- Light emitting diodes . . . 141
- Local display . . . 142
- Overview . . . 148
- Remedial measures . . . 148
- Web browser . . . 144

Diagnostic list . . . 152
Diagnostic message . . . 142
DIP switch
- see Write protection switch

Direct access . . . 57
Direct access code . . . 51
Disabling write protection . . . 125
Display
- see Local display

Display and operating module DKX001 . . . 187
Display area
- For operational display . . . 49
- In the navigation view . . . 51

Display values
- For locking status . . . 129

Displaying data logging . . . 136
Disposal . . . 160
Document
- Function . . . 6
- Symbols . . . 6

Document function . . . 6

E
Editing view . . . 53
- Input screen . . . 54
- Using operating elements . . . 53, 54

Electrical connection
- Computer with web browser (e.g. Microsoft Edge) 67
- Degree of protection . . . 44
- Measuring device . . . 33

www.nicsanat.com
021-87700210
NIC SANAT
نیک صنعت

Operating tool (e.g. FieldCare, DeviceCare, AMS Device Manager, SIMATIC PDM) . . . 67
Operating tools
Via Modbus RS485 protocol . . . 67
Via service interface (CDI-RJ45) . . . 67
Via WLAN interface . . . 68
Web server . . . 67
WLAN interface . . . 68
Electromagnetic compatibility . . . 181
Electronics module . . . 14
Enabling write protection . . . 125
Enabling/disabling the keypad lock . . . 60
Endress+Hauser services
Maintenance . . . 158
Repair . . . 159
Environment
Storage temperature . . . 180
Vibration- and shock-resistance . . . 180
Error messages
see Diagnostic messages
Event list . . . 152
Event logbook . . . 152
Ex approval . . . 192
Extended order code
Sensor . . . 17
Transmitter . . . 16
Exterior cleaning . . . 157

F

Field of application
Residual risks . . . 10
FieldCare . . . 69
Device description file . . . 72
Establishing a connection . . . 70
Function . . . 69
User interface . . . 70
Filtering the event logbook . . . 153
Firmware
Release date . . . 72
Version . . . 72
Firmware history . . . 156
Flow conditioner . . . 22
Flow limit . . . 182
Function codes . . . 73
Functional Safety (SIL) . . . 193
Functions
see Parameters

G

Galvanic isolation . . . 175

H

Hardware write protection . . . 127
HART protocol
Revision . . . 72
Help text
Calling up . . . 58
Closing . . . 58
Explanation . . . 58
HistoROM . . . 113, 122
Hot tap, process pressure . . . 183

I

Identifying the measuring device . . . 15
Incoming acceptance . . . 15
Influence
Ambient temperature . . . 179
Medium pressure . . . 179
Information about this document . . . 6
Input . . . 166
Inspection
Installation . . . 32
Received goods . . . 15
Installation conditions
Sensor heating . . . 26
System pressure . . . 26
Intended use . . . 9

L

Languages, operation options . . . 187
Line recorder . . . 136
Local display . . . 187
Navigation view . . . 51
see Diagnostic message
see In alarm condition
see Operational display
Text editor . . . 53
Low flow cut off . . . 175

M

Main electronics module . . . 14
Maintenance . . . 157
Maintenance tasks . . . 157
Recalibration . . . 158
Managing the device configuration . . . 113, 122
Manufacturer ID . . . 72
Materials . . . 184
Measured variables
see Process variables
Measuring and test equipment . . . 158
Measuring device
Configuring . . . 79
Conversion . . . 159
Disposal . . . 160
Preparing for electrical connection . . . 36
Preparing for mounting . . . 28
Removing . . . 160
Repairs . . . 159
Structure . . . 14
Switching on . . . 78
Measuring principle . . . 165
Measuring system . . . 165
Medium pressure
Influence . . . 179
Menu
Diagnostics . . . 151
Setup . . . 80

www.nicsanat.com
021-87700210
NIC SANAT
نیک صنعت

Menus
For measuring device configuration 79
For specific settings 106
Modbus RS485
Configuring error response mode 147
Diagnostic information 147
Function codes 73
Modbus data map 75
Read access 73
Reading out data 76
Register addresses 74
Register information 74
Response time 74
Scan list 76
Write access 73
Mounting 19
Mounting preparations 28
Mounting tool 28

N

Nameplate
Sensor 17
Transmitter 16
Navigation path (navigation view) 51
Navigation view
In the submenu 51
In the wizard 51
Numeric editor 53

O

Onsite display
Numeric editor 53
Operable flow range 169
Operating elements 55, 143
Operating keys
see Operating elements
Operating menu
Menus, submenus 47
Structure 47
Submenus and user roles 48
Operating philosophy 48
Operation 129
Operation options 46
Operational display 49
Operational safety 10
Order code 16, 17
Output signal 171
Output variables 171

P

Packaging disposal 18
Parameter
Changing 58
Entering values or text 58
Parameter settings
Adjustment values in use (Submenu) 120
Administration (Submenu) 115
Advanced setup (Submenu) 106
Communication (Submenu) 88
Configuration backup (Submenu) 113, 122
Current input 90
Current input (Wizard) 90
Current input 1 to n (Submenu) 132
Current output 92
Current output (Wizard) 92
Data logging (Submenu) 136
Define access code (Wizard) 115
Device information (Submenu) 155
Diagnostics (Menu) 151
Display (Submenu) 108
Display (Wizard) 102
I/O configuration 89
I/O configuration (Submenu) 89
In-situ adjustment (Submenu) 118
Low flow cut off (Wizard) 105
Measurement mode (Wizard) 80
Process variables (Submenu) 130
Pulse/frequency/switch output 95
Pulse/frequency/switch output (Wizard) . . 95, 96, 99
Pulse/frequency/switch output 1 to n (Submenu) 134
Reference conditions (Submenu) 84
Relay output 101
Relay output 1 to n (Submenu) 134
Relay output 1 to n (Wizard) 101
Reset access code (Submenu) 115
Setup (Menu) 80
Simulation (Submenu) 123
Status input 91
Status input 1 to n (Submenu) 91, 132
System units (Submenu) 86
System values (Submenu) 131
Totalizer (Submenu) 131
Totalizer 1 to n (Submenu) 106
Totalizer handling (Submenu) 135
Value current output 1 to n (Submenu) 133
Web server (Submenu) 66
WLAN settings (Wizard) 111
Post-connection check 78
Post-connection check (checklist) 45
Post-installation check (checklist) 32
Post-mounting check 78
Potential equalization 40
Power consumption 176
Power supply failure 176
Process
Cold tap, ambient pressure 183
Hot tap, process pressure 183
Process connections 186
Product safety 10
Protecting parameter settings 125

R

Radio approval 193
RCM marking 192
Read access 59
Reading off measured values 129
Reading out diagnostic information, Modbus RS485 147
Recalibration 158

www.nicsanat.com
021-87700210
NIC SANAT
نیک صنعت

Registered trademarks 8
Remedial measures
Calling up 144
Closing 144
Remote operation 188
Repair 159
Notes 159
Repair of a device 159
Replacement
Device components 159
Requirements for personnel 9
Response time 179
Return 159

S

Safety 9
Sensor adjustment 85
Sensor heating 26
Serial number 16, 17
Setting the operating language 78
Settings
Adapting the measuring device to the process conditions 135
Administration 114
Advanced display configurations 108
Communication interface 88
Current input 90
Current output 92
I/O configuration 89
In-situ adjustment 116
Local display 102
Low flow cut off 105
Managing the device configuration 113, 122
Measurement mode 80
Operating language 78
Pulse output 95
Pulse/frequency/switch output 95, 96
Reference conditions 84
Relay output 101
Resetting the device 155
Resetting the totalizer 135
Simulation 123
Status input 91
Switch output 99
System units 86
Tag name 80
Totalizer 106
Totalizer reset 135
WLAN 111
Signal on alarm 173
SIL (functional safety) 193
Software release 72
Spare part 159
Spare parts 159
Special
Installation instructions 27
Special connection instructions 41
Standards and guidelines 194
Status area
For operational display 49
In the navigation view 51
Status signals 142, 145
Storage concept 190
Storage conditions 18
Storage temperature 18
Storage temperature range 180
Structure
Measuring device 14
Operating menu 47
Submenu
Adjustment values in use 120
Administration 114, 115
Advanced setup 106
Communication 88
Configuration backup 113, 122
Current input 1 to n 132
Data logging 136
Device information 155
Display 108
Event list 152
I/O configuration 89
In-situ adjustment 118
Input values 132
Measured values 129
Output values 133
Overview 48
Process variables 130
Pulse/frequency/switch output 1 to n 134
Reference conditions 84
Relay output 1 to n 134
Reset access code 115
Simulation 123
Status input 1 to n 91, 132
System units 86
System values 131
Totalizer 131
Totalizer 1 to n 106
Totalizer handling 135
Value current output 1 to n 133
Web server 66
Supply voltage 176
Switch output 173
Symbols
Controlling data entries 54
For communication 49
For diagnostic behavior 49
For locking 49
For measured variable 49
For measurement channel number 49
For menus 51
For parameters 51
For status signal 49
For submenu 51
For wizard 51
In the status area of the local display 49
Input screen 54
Operating elements 53

www.nicsanat.com
021-87700210
NIC SANAT
نیک صنعت

System design
Measuring system 165
see Measuring device design
System integration 72
System pressure 26

T
Technical data, overview 165
Temperature range
Ambient temperature range for display 187
Storage temperature 18
Terminal assignment 36
Terminals 176
Text editor 53
Tool
For mounting 28
Transport 18
Tool tip
see Help text
Tools
Electrical connection 33
Totalizer
Configuring 106
Transmitter
Turning the display module 31
Turning the housing 30
Transporting the measuring device 18
Troubleshooting
General 139
Turning the display module 31
Turning the electronics housing
see Turning the transmitter housing
Turning the transmitter housing 30

U
UKCA marking 192
Use of measuring device
Borderline cases 9
Incorrect use 9
see Intended use
User interface
Current diagnostic event 151
Previous diagnostic event 151
User roles 48

V
Version data for the device 72
Vibration- and shock-resistance 180

W
W@M 158, 159
W@M Device Viewer 15
Weight
SI units 184
Transport (notes) 18
US units 184
Wizard
Current input 90
Current output 92
Define access code 115
Display 102
Low flow cut off 105
Measurement mode 80
Pulse/frequency/switch output 95, 96, 99
Relay output 1 to n 101
WLAN settings 111
WLAN settings 111
Workplace safety 10
Write access 59
Write protection
Via access code 125
Via write protection switch 127
Write protection switch 127

www.nicsanat.com
021-87700210
NIC SANAT
نیک صنعت

www.nicsanat.com
021-87700210
NIC SANAT
نیک صنعت

NIC SANAT
نیک صنعت
www.nicsanat.com
021-87700210

71620275

www.addresses.endress.com

Endress+Hauser
People for Process Automation